MANDÍK

TPM 018/01
Version 2026-10-23

FDMA

Fire damper

Technical Documentation
Installation, Commissioning, Operation, Maintenance and Service Manual

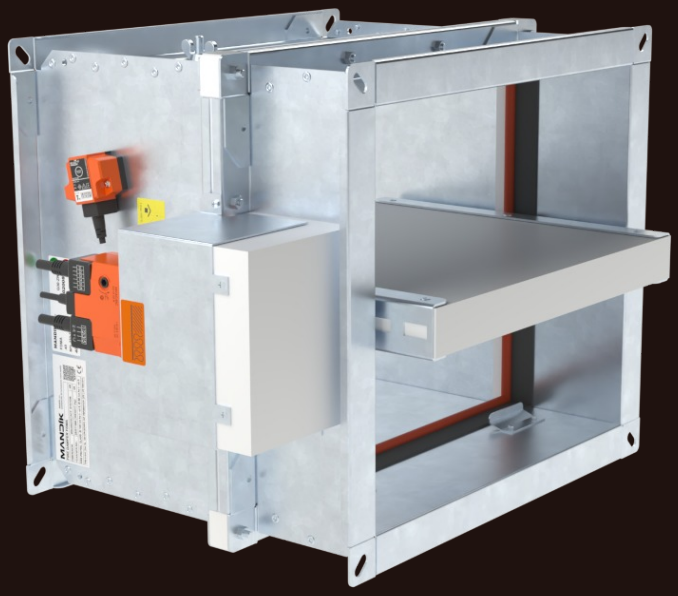

CE
1391

CCPi
ASSESSED PRODUCT INFORMATION
015800191/1227
Fire dampers

MANDÍK®
www.mandik.com

MANDÍK, a.s. • Dobříšská 550 • 267 24 Hostomice • Czech Republic • Tel.: +420 311 706 742 • E-Mail: mandik@mandik.cz

These technical specifications state a row of manufactured sizes and models of fire dampers FDMA.
It is valid for production, designing, ordering, delivery, maintenance and operation.

CONTENT

I. GENERAL....3
Description....3
II. DESIGN....4
Design with manual control....4
Design with spring return actuator....9
III. DIMENSIONS....16
Technical parameters....18
IV. INSTALLATION....24
Placement and installation....24
Statement of installations....26
In solid wall construction....27
Installation outside solid wall construction....30
In gypsum wall construction....32
Installation outside gypsum wall construction....35
In solid ceiling construction....37
Outside solid ceiling construction....40
V. SUSPENSION SYSTEMS....41
Example of duct connection....44
VI. TECHNICAL DATA....45
Pressure loss....45
Noise data....47
VII. MATERIAL, FINISHING....48
VIII. TRANSPORTATION, STORAGE AND WARRANTY....49
Logistic terms....49
Warranty....49
IX. ASSEMBLY, ATTENDANCE AND MAINTENANCE....50
Commissioning and revisions....53
X. ORDERING INFORMATIONS....55
Ordering key....55
Accessories....56
Data label....57

I. GENERAL

Description

Fire dampers are shutters in ducts of air-conditioning devices that prevent the spread of fire and combustion products from one fire segment to the other one by means of closing the duct in the points of fire separating constructions.

Damper blade automatically closes air duct using a closing spring or a spring return actuator. The closing spring is actuated by pressing a button on the manual control or by melting a thermal fuse.

The return spring of the actuator is actuated when a thermoelectric activation device BAT is activated, when a test button on BAT is pressed or when power supply of the actuator is interrupted.

After closing the blade, the damper is sealed with silicon against smoke penetration. On request by customer, the damper can be supplied silicon-free. In the closed position, the damper is also sealed with material which increases its volume due to increasing temperature and air proofs the air duct.

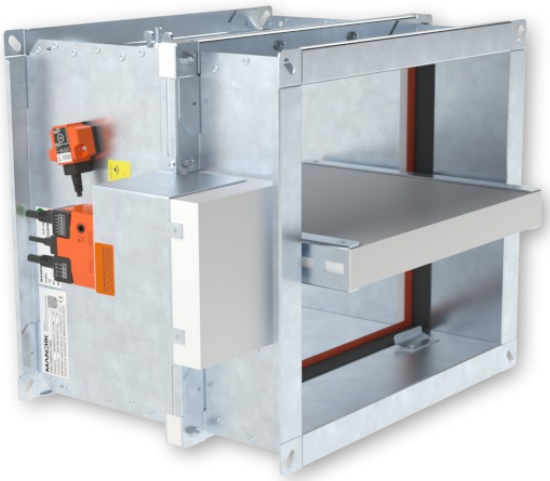

FDMA with spring return actuator

FDMA with manual control

Damper characteristics

- CE certified acc. to EN 15650
- Tested in accordance with EN 1366-2
- Classified acc. to EN 13501-3+A1
- External casing leakage for size: A<160 or B<160 class ATC 4 (old marking “B“), A≥160 a B≥160 class ATC 3 (old marking “C“), Internal leakage class 2 acc. to EN 1751
- Cycling test in class C_{10000} acc. to EN 15650
- Corrosion resistant acc. to EN 15650
- Certificate of constancy of performance No. 1391-CPR-XXXX/XXXX
- Declaration of Performance No. PM/FDMA/01/XX/X
- Hygienic assessment of fire dampers - Report No. 1.6/pos/19/19b

Working conditions

- Exact damper function is provided under the following conditions:
  - maximum air velocity 12 m/s
  - maximum pressure difference 1200 Pa
  - the air circulation in the whole damper section must be secured steady over the entire surface.
- Dampers can be installed in any position
- Dampers are suitable for systems without abrasive, chemical and adhesive particles.
- Dampers are designed for macroclimatic areas with mild climate according to EN IEC 60 721-3-3 ed.2., class 3K22. (Environment 3K22 is typically protected place with regulated temperature)
- Temperature in the place of installation is permitted to range from -30°C to +50°C.

II. DESIGN

Design with manual control

Design .01

- Design with manual control with a thermal fuse which actuates the shutting device, after the nominal activation temperature 72°C has been reached.
- Automatic initiation of the manual control is not activated if the temperature does not exceed 70°C.
- In case that other activation temperatures are required, thermal fuses with nominal activation temperature +104°C or +147°C can be supplied (this requirement must be specified in the order).

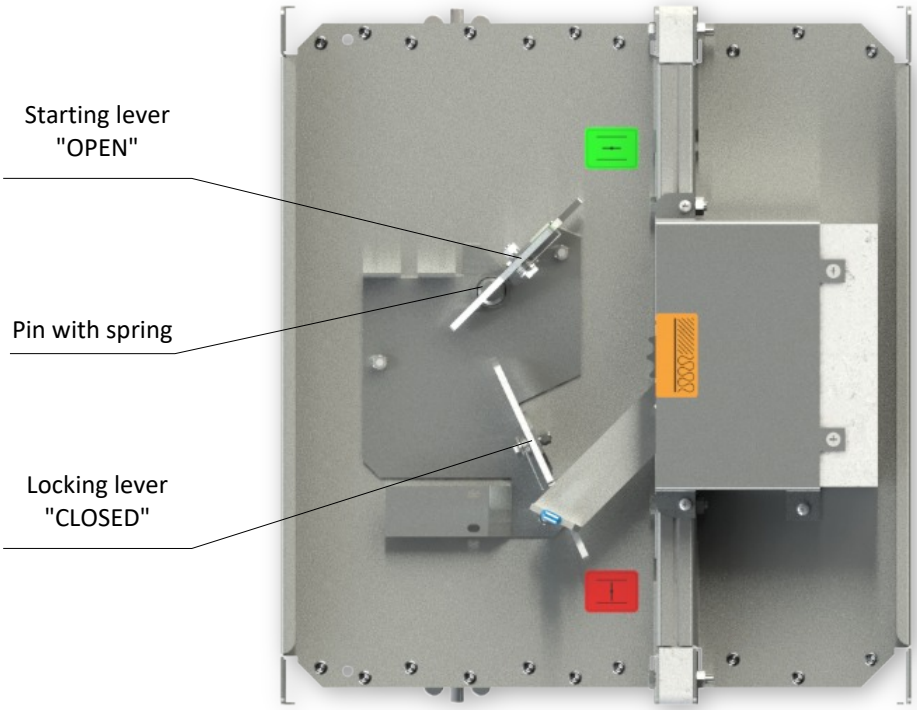

Design .01

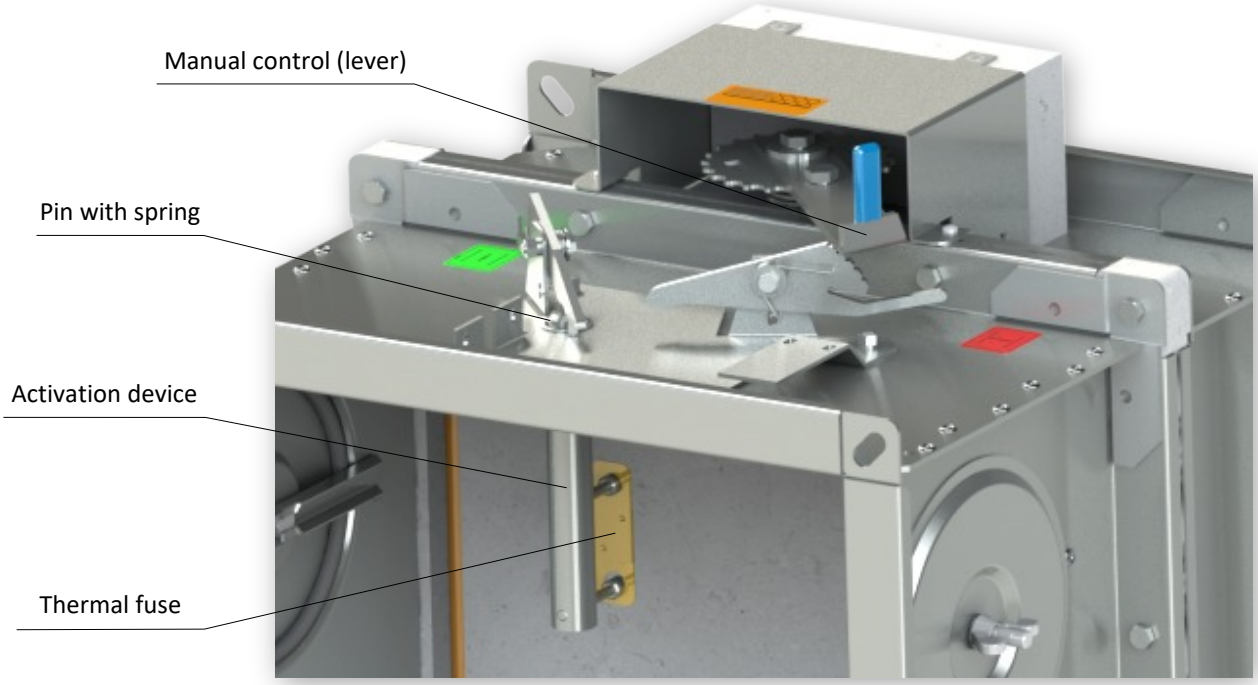

Detail of the manual control, thermal fuse and activation device

Design .11

- Design .01 with manual control can be complemented with a limit switch signaling of the damper blade position "CLOSED".
- Description of electrical components → see page 8

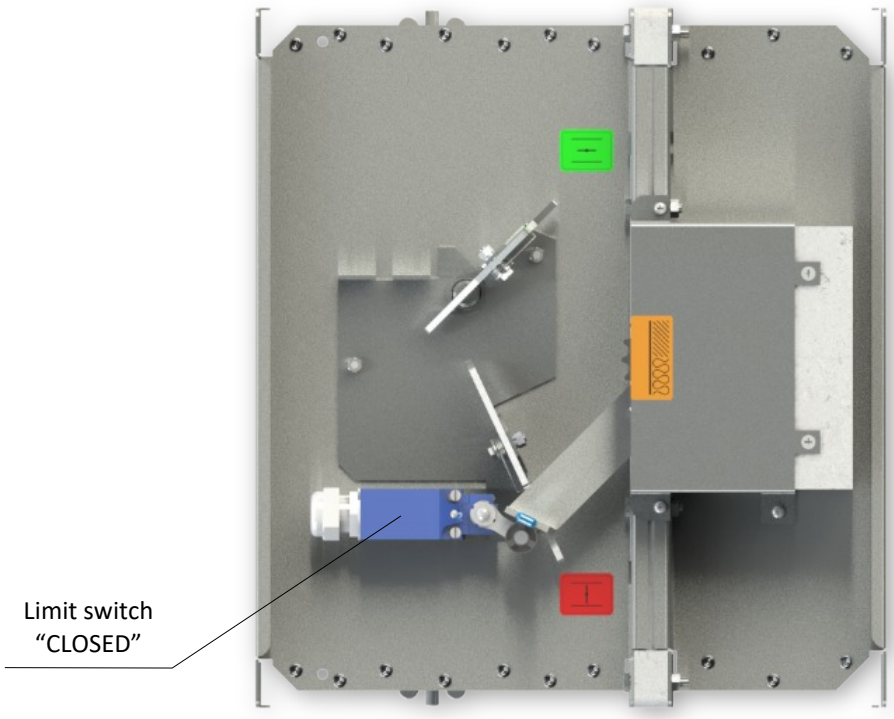

Design .11

Design .80

- Design .01 with manual control can be complemented with two limit switches signaling of the damper blade position "CLOSED" and "OPEN".
- Description of electrical components → see page 8

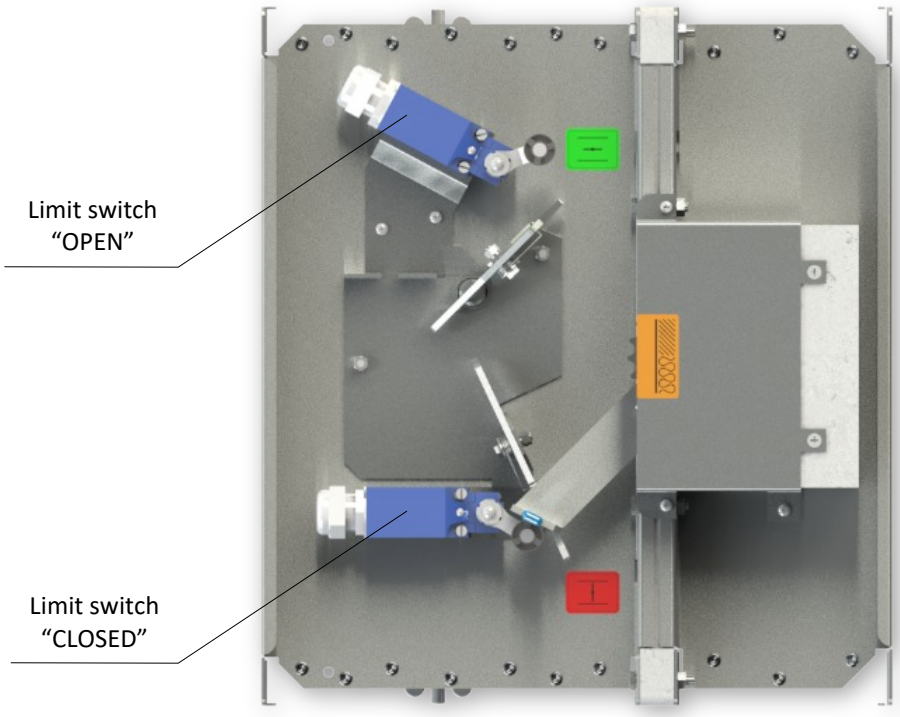

Design .80

Design .20 and .21 - ON REQUEST ONLY

- Design .01 with mechanical control can be complemented with initiation by means of an electromagnet (solenoid). The voltage of the electromagnet (solenoid) can be AC 230V, AC/DC 24V.
- By voltage AC 230 V is damper equipped by electromagnet EM230. By voltage AC/DC 24 V is damper equipped by electromagnet EM230 with pre-pulse switch SIEM24. SEIM24 activates the electromagnet after capacitor charge witch is placed inside of SIEM24. It takes about 10 sec. Charging time depends on the current supply.
- For reliable operation is necessary connect to electromagnet or pre-pulse switch appropriate supply for 20 to 30 sec.
- **Notice:** After activation of electromagnet is released initiation lever and damper is closed. After activation is initiation lever released. If is damper set up in position "OPEN" is necessary unlock initiation lever by pulling of electromagnet core.
- Description of electrical components → see page 8

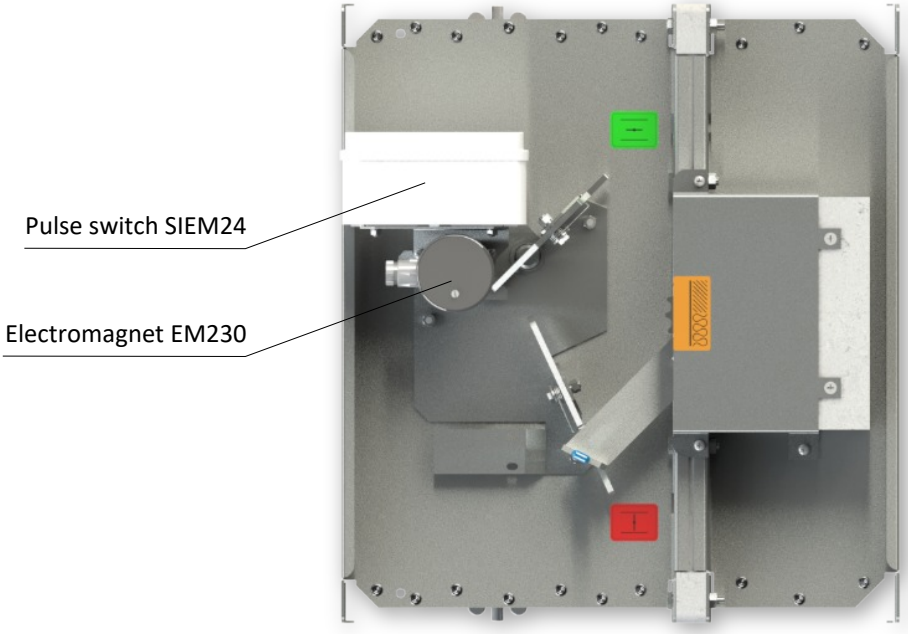

Design .20 and .21

Design .23 and .24 - ON REQUEST ONLY

- Design .20 and .21 with manual control can be complemented with a limit switch signaling of the damper blade position "CLOSED".
- Description of electrical components → see page 8

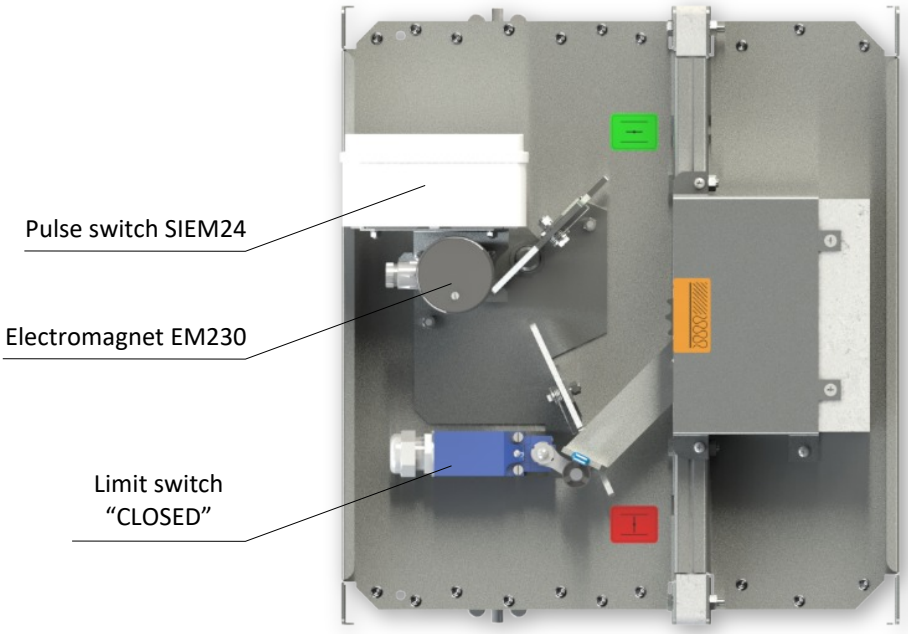

Design .23 and .24

Design .82 and .83 - ON REQUEST ONLY

- Design .20 and .21 with manual control can be complemented with two limit switches signaling of the damper blade position "CLOSED" and "OPEN".
- Description of electrical components → see page 8

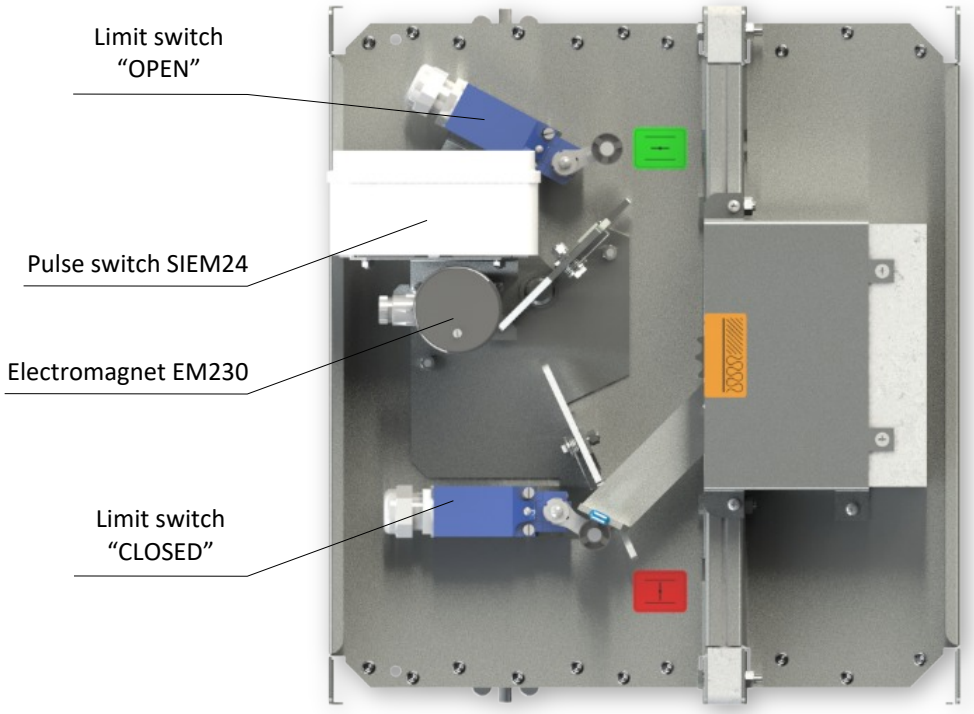

Design .82 and .83

Design .30, .33 and .85 - Product designed into the ZONE 2 - ON REQUEST ONLY

- Such designs are the same as the designs .23, .24 and .83 and they are adapted to fulfill the requirements of the usage in the Non- explosive environment.
- Description of electrical components → see page 8

Fusible link replacement:*

1. The mechanism (damper) must be in the closed position (indicated by the red area on the sticker).
2. Release the control lever.
3. Using adjustable pliers, squeeze the fusible link clips together.
4. Pull the fusible link out of the clips.
5. Using adjustable pliers, squeeze the fusible link clips together again.
6. Insert the new fusible link into the clips.

Function check:**

7. Otevřete mechanismus (klapku) přesunutím páky do polohy Open (označené zelenou oblastí na štítku).
8. Release the control lever and check that the mechanism closes properly. Repeat this procedure at least 3 times.

* The mechanism can be removed for change of the fusible link.
** Caution: Risk of injury from moving parts.

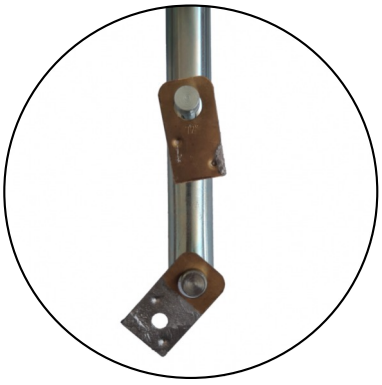

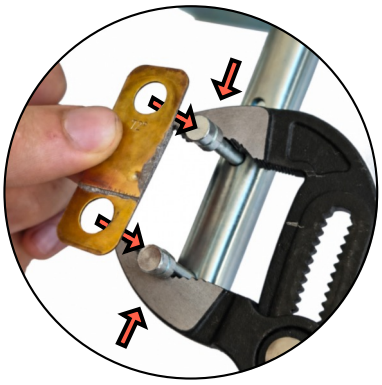

Limit switch XCKN2118G11

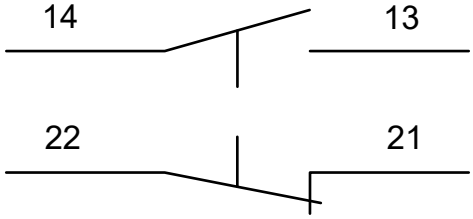

Nominal voltage and max. current	AC 240 V; 3 A DC 250 V; 0,1 A
Degree of protection	IP 65
Ambient temperature	-25°C … +70°C

Electromagnet EM 230

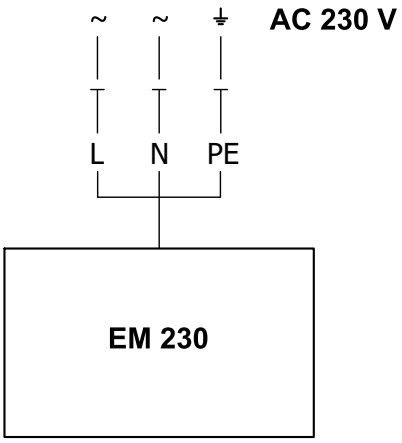

Nominal voltage	AC 230 V / 50 Hz
Attraction current	1,2 A
Degree of protection	IP 40
Ambient temperature	-10°C … +40°C
Connection	cable 1m, 3x0,75 mm^2

Electromagnet EM 230 with pulse switch SIEM 24

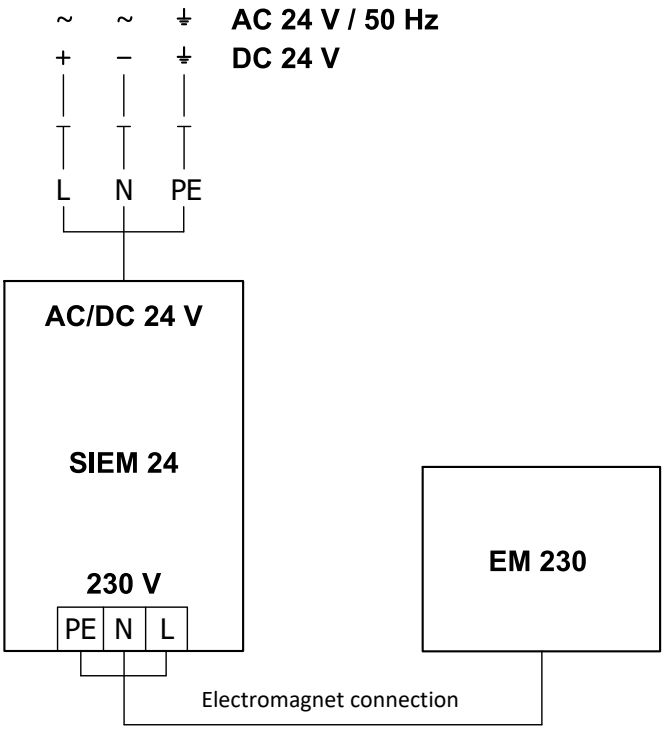

Nominal voltage	AC 24 V / 50 Hz DC 24 V
Attraction current	min. 2A*
Degree of protection	IP 40
Ambient temperature	-10°C … +40°C
Switching frequency	max. 1x per minute
Connection	cable 1m, 3x0,75 mm^2

* *It is necessary to use a sufficiently robust switched-mode power supply (allow for a current of 2 A per magnet), or to use a transformer with a rectifier, where the voltage drop is minimal and the output will not be briefly disconnected under overload.*

Design with spring return actuator

Design .40 and .50

- The fire dampers are equipped with Belimo spring return actuators with thermoelectric activation device BAT. The spring return actuator types are BFL, BFN or BF depending on the damper size. (Further mentioned as „actuator“).
- After being connected to power supply 230V or AC/DC 24V, the actuator rotates the damper blade to the operating position "OPEN" and at the same time pre-stretches its return spring.
- When the actuator is power supplied, the damper blade is in the position "OPEN" and the return spring is pre-stretched.
- Time needed for full opening of the damper blade from the position "CLOSED" to the position "OPEN" is maximum 120 sec. If the actuator power supply is interrupted (due to loss of supply voltage, or pressing a test button on the thermoelectric activation device BAT), the actuator rotates the damper blade to the breakdown position "CLOSED".
- The time of closing the damper blade from the position "OPEN" to the position "CLOSED" takes maximum 20 sec.
- In case that the power supply is restored again (the blade can be in any position), the actuator starts to rotate the damper blade back to the position "OPEN".
- A thermoelectric activation device BAT, which contains two thermal fuses Tf1 and Tf2, is an integral part of the actuator.
- These fuses are activated when temperature +72°C has been reached (the fuse Tf1 due to temperature outside the duct and the fuse Tf2 due to temperature inside the duct). The thermoelectric activation device can also be equipped with a Tf2 thermal fuse type ZBAT 95/120/140 (must be specified in the order). In this case, the activation temperature inside the duct is +95°C, +120°C or +140°C (depending on the type).
- After the thermal fuse Tf1 or Tf2 has been activated, the power supply is permanently and irreversibly interrupted and the actuator, by means of the pre-stretched spring, rotates the damper blade into the breakdown position "CLOSED".
- Signalisation of damper blade position "OPEN" and "CLOSE" is provided by two microswitches.

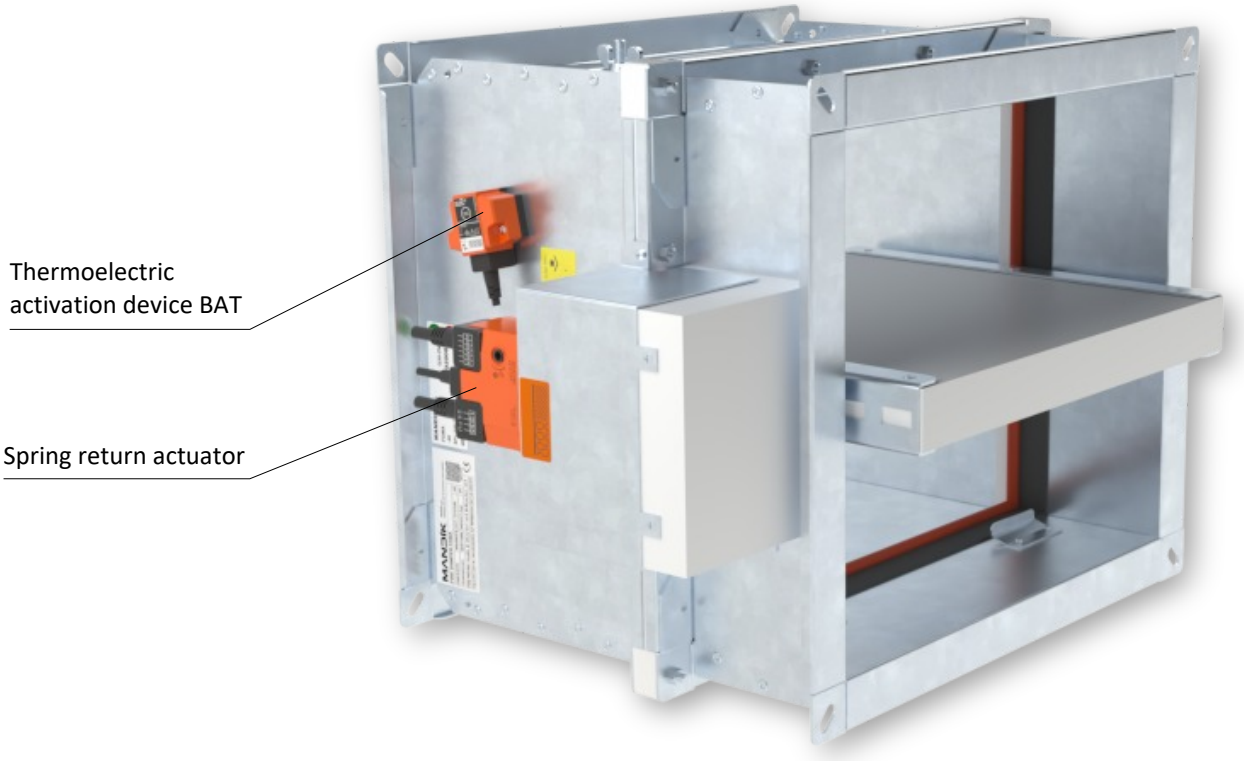

Design.40 and .50

Actuator BELIMO BFL 230-T

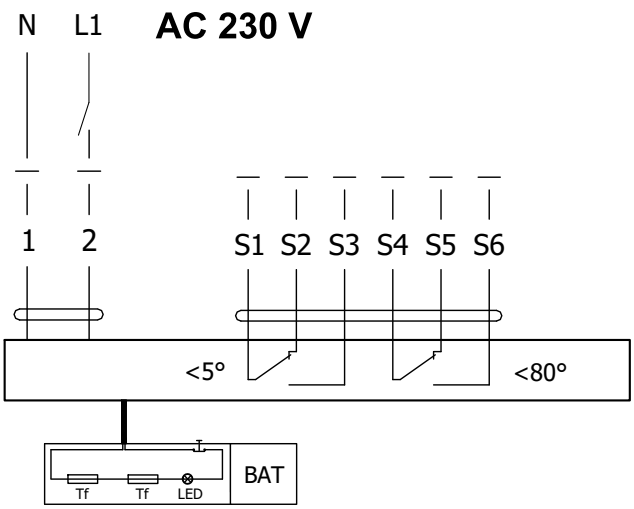

Actuator BELIMO BFL 24-T(-ST)

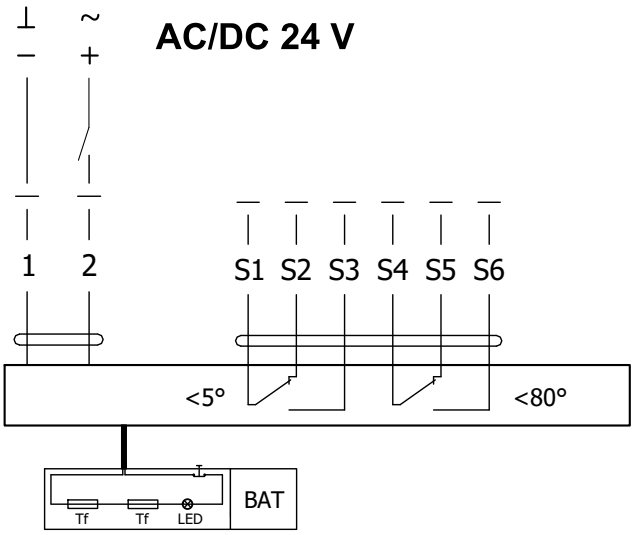

Actuator BELIMO BFL 230-T(-ST), BFL 24-T(-ST)		
Actuator BELIMO - 4 Nm/ 3 Nm Spring	**BFL 230-T(-ST)**	**BFL 24-T(-ST)**
Power voltage	AC 230 V 50/60Hz	AC/DC 24 V 50/60Hz
Power consumption - in operation - in rest position	2,6 W 0,7 W	2,0 W 0,7 W
Dimensioning	4 VA (Imax 4 A @ 5 ms)	2,8 VA (Imax 2,9 A @ 5 ms)
Protection class	II	III
Degree of protection	IP 54	
Running time - motor - spring return	< 60 s ~ 20 s	
Ambient temperature - normal duty - safety duty - non-operating temperature	 -30°C … +55°C The safe position will be attained up to max. +75°C -40°C … +55°C	
Connection - supply/control - auxiliary switch	cable 1 m, 2 x 0,75 mm² (BFL 2xx-T-ST) with 3-pin plug-in connectors cable 1 m, 6 x 0,75 mm² (BFL 2xx-T-ST) with 6-pin plug-in connectors	
Response temperature thermal fuse	duct outside temperature +72°C duct inside temperature +72°C	

Actuator BELIMO BFN 230-T

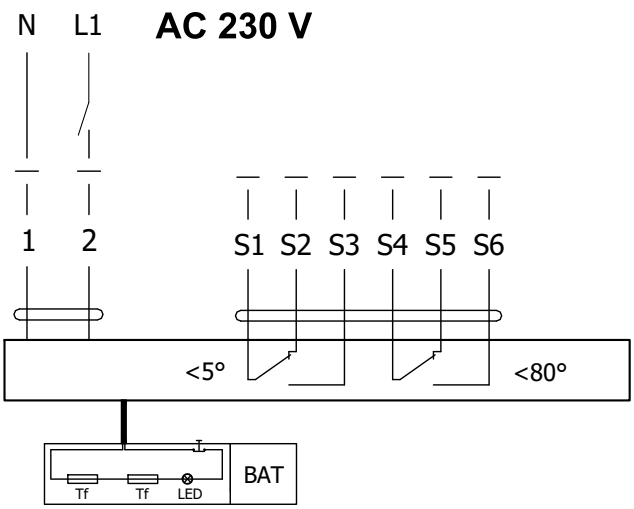

Actuator BELIMO BFN 24-T(-ST)

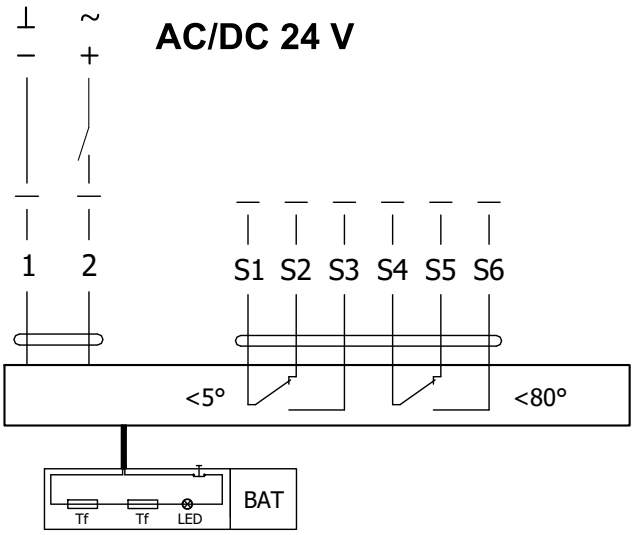

Actuator BELIMO BFN 230-T(-ST), BFN 24-T(-ST)		
Actuator BELIMO - 9 Nm/ 7 Nm Spring	**BFN 230-T(-ST)**	**BFN 24-T(-ST)**
Power voltage	AC 230 V 50/60Hz	AC/DC 24 V 50/60Hz
Power consumption - in operation - in rest position	3,5 W 1,3 W	3,2 W 1,2 W
Dimensioning	6,5 VA (Imax 4 A @ 5 ms)	4,3 VA (Imax 2,9 A @ 5 ms)
Protection class	II	III
Degree of protection	IP 54	
Running time - motor - spring return	< 60 s ~ 20 s	
Ambient temperature - normal duty - safety duty - non-operating temperature	 -30°C … +55°C The safe position will be attained up to max. +75°C -40°C … +55°C	
Connection - supply/control - auxiliary switch	cable 1 m, 2 x 0,75 mm² (BFN 2xx-T-ST) with 3-pin plug-in connectors cable 1 m, 6 x 0,75 mm² (BFN 2xx-T-ST) with 6-pin plug-in connectors	
Response temperature thermal fuse	duct outside temperature +72°C duct inside temperature +72°C	

Actuator BELIMO BF 230-TN

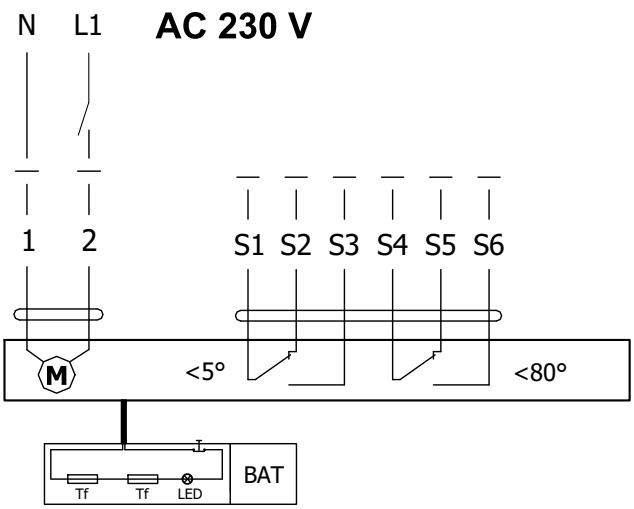

Actuator BELIMO BF 24-TN (-ST)

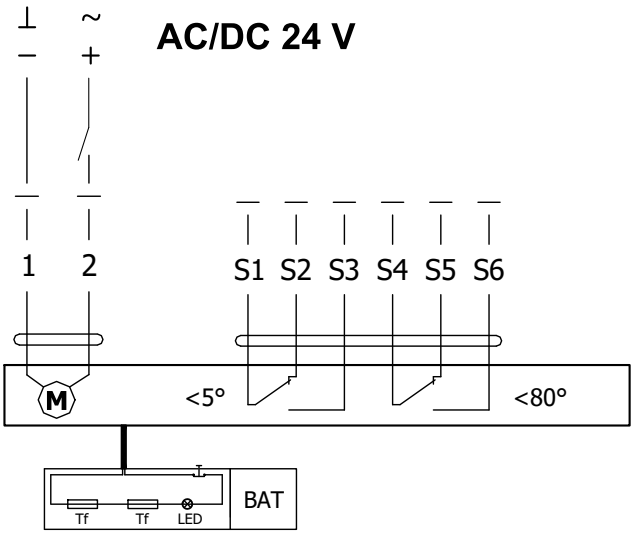

Actuator BELIMO BF 230-TN(-ST), BF 24-TN(-ST)		
Actuator BELIMO - 18 Nm/ 12 Nm Spring	**BF 230-TN(-ST)**	**BF 24-TN(-ST)**
Power voltage	AC 230 V 50/60Hz	AC/DC 24 V 50/60Hz
Power consumption - in operation - in rest position	8,5 W 3 W	7 W 2 W
Dimensioning	11 VA (Imax 8,3 A @ 5 ms)	10 VA (Imax 8,3 A @ 5 ms)
Protection class	II	III
Degree of protection	IP 54	
Running time - motor - spring return	120 s ~ 16 s	
Ambient temperature - normal duty - safety duty - non-operating temperature	 -30°C … +50°C The safe position will be attained up to max. +75°C -40°C … +50°C	
Connection - supply/control - auxiliary switch	cable 1 m, 2 x 0,75 mm² (BF 2xx-TN-ST) with 3-pin plug-in connectors cable 1 m, 6 x 0,75 mm² (BF 2xx-TN-ST) with 6-pin plug-in connectors	
Response temperature thermal fuse	duct outside temperature +72°C duct inside temperature +72°C	

Thermoelectric activation device BAT

- If the thermal fuse Tf1 is interrupted (due to temperature outside the duct), it is necessary to replace the spring return actuator. Thermoelectric activation device BAT is integral part of the actuator.
- If the thermal fuse Tf2 is interrupted (due to temperature inside the duct), only the spare part ZBAT 72 (95/120/140) needs to be replaced (acc.to the activation temperature).
- When one of the thermal fuses responds, the supply voltage is interrupted permanently and irreversibly.
- The function (interruption of the supply voltage) can be checked by pressing the test button.
- Installation is carried out with the pre-assembled, self-tapping screws.

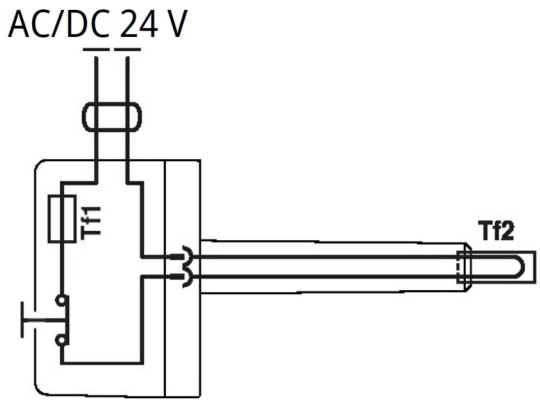

BELIMO ZBAT 72
Black (BK) = 72°C (standard)

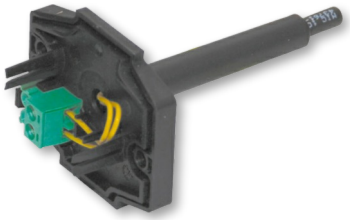

BELIMO ZBAT 95
Grey (GY) = 95°C

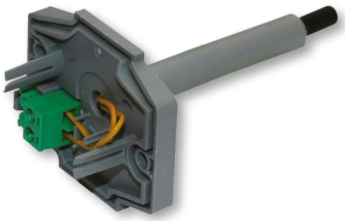

BELIMO ZBAT 120
Orange (OG) = 120°C

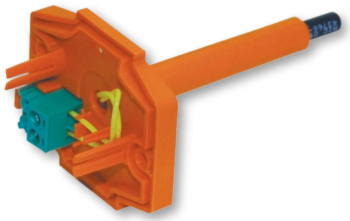

BELIMO ZBAT 140
Red (RD) = 140°C

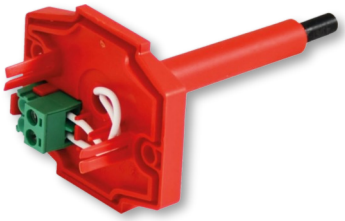

Thermoelectric activation device BAT 72 (95/120/140)	
Power voltage	AC/DC 24 V 50/60Hz
Rated current	1 A
AC/DC throughput resistance	<1 Ω
Protection class	III
Degree of protection	IP 54
Probe length	65 mm
Ambient temperature Storage temperature Ambient humidity	-30°C … +50°C -40°C … +50°C Max. 95% RH, non-condensing
Connection supply	Cable 1 m, 2 x 0.5 mm², Betaflam cable heatresistant up to 145°C
Response temperature thermal fuse	Duct inside temperature +72 (95/120/140)°C Duct outside temperature +72 (95/120/140)°C

Design .41 and .51

- Design .41 or .51 with actuator and smoke detector ORS 142 K. The voltage can be AC 230 V or 24 V DC. Design .41 with voltage AC 230 V is equipped with communication and supply device BKN 230-24-MOD and with actuator BF 24-TN (BFL 24-T, BFN 24-T).
- The smoke detector is activated when smoke spreads in air duct system. Deactivation of the smoke detector alarm status is provided by interruption of supply voltage for min. 2s.
- Signalisation of damper blade position "OPEN" and "CLOSE" is provided by two microswitches.
- For sizes A<180 mm or B<180 mm, the optical smoke detector ORS 142 K is not part of the fire damper and is supplied separately.

Design .41 with actuator BF 24-TN (BFL, BFN 24-T), with smoke detector ORS 142 K and with supply device BKN 230-24-MOD (voltage AC 230 V)

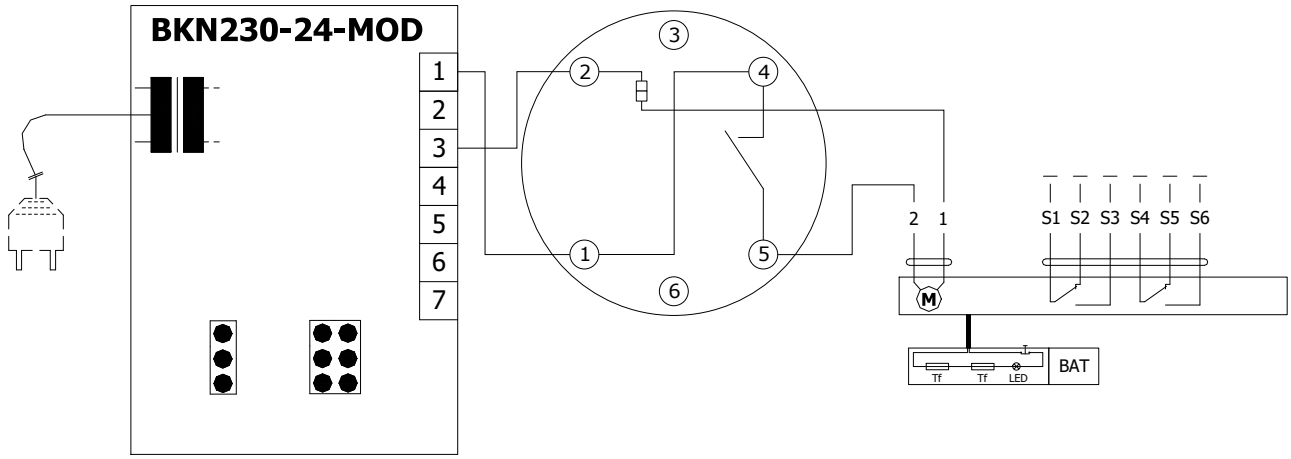

Design .51 with actuator BF 24-TN (BFL, BFN 24-T), with smoke detector ORS 142 K (voltage 24 V DC)

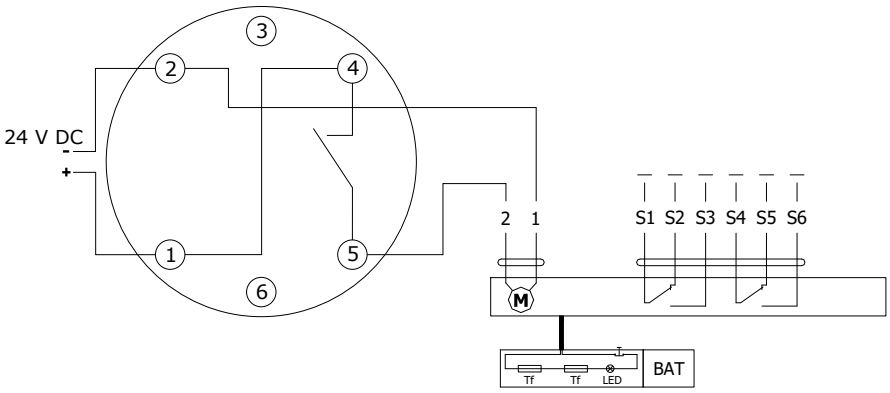

Communication and supply device BKN 230-24-MOD	
Nominal voltage	AC 230 V 50/60Hz
Power consumption	3 W (operating position)
Dimensioning	14 VA (including actuator)
Protection Class	II
Degree of protection	IP 40
Ambient temperature Non-operating temperature	-20°C … +50°C -40°C … +80°C
Connection - net - motor - terminal board	cable 0,9 m with EURO plug type 26 6-pole connector, 3-pole connector screw terminals for cable 2x1,5 mm²

Optical smoke detector ORS 142 K with the socket 143A

- The smoke detector ORS 142 K is used for early smoke detection in rooms or inside the ventilation system.
- The sensor operates on the light scatter principle. Inside the scanning chamber is a light source and a light sensor, in the normal state the light from the source does not fall on the sensor. Only when smoke enters the scanning chamber the light is scattered and falls on the senzor.
- The smoke detector can be connected directly to the actuator (design .41 and .51) which, in case of smoke detection, passes to the safety position, or to the BKN communication and supply device (design .63).
- By early detection of smoke, it can be effectively prevented from spreading of smoke through the ventilation system. In addition to smoke detection, the sensor can distinguish and signal slight and heavy contamination, e.g. the presence of large amounts of dust.
- The ORS 142 K smoke detector has an alarm memory, i.e. if the alarm is triggered, the safety relay opens and stays in this state even if the smoke disappears from the scanning chamber. The sensor remains in the alarm state until the power supply is briefly reset.
- On the pin 3, an external device can be connected via RS-Bus communication to report the status of the sensor.
- Pin 6 has no connection to the detector and is designed as a load-bearing structure in the base.

ORS 142 K

Socket 143A

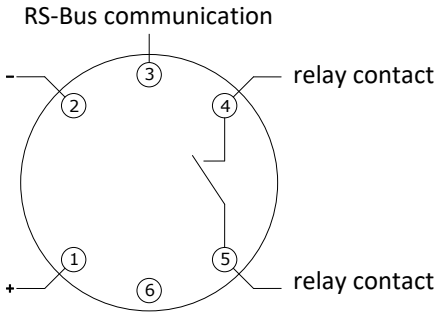

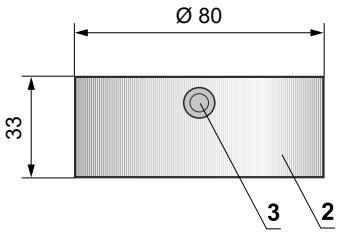

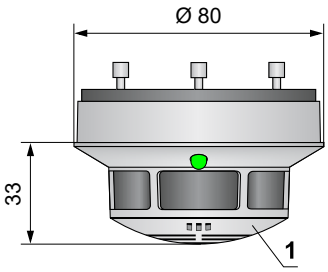

Relay contact		LED	
In operation	4 5	Green	Shines
Slight contamination		Green / Yellow	Flashes
Heavy contamination		Green / Yellow	Flashes
Fault	4 5	Yellow	Shines
Alarm		Red	Shines
Power Off		Off	–

1 ORS 142 K
2 Socket 143A
3 Side cable entries Ø 9mm
4 Rear cable entries Ø 9mm
5 Fixing hole Ø 4,5 mm
6 Fixing hole Ø 3,7 mm

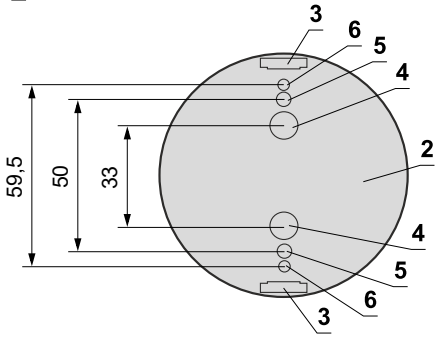

Optical smoke detector ORS 142 K with the socket 143A	
Operating voltage	18 … 28 V DC
Residual ripple	≤ 200 mV
Power Consumption Socket (without actuator)	max. 22 mA
Degree of protection	IP 42
Ambient temperature	-20°C … +75°C
Additional temperature senzor	+70°C
Connection - net - motor - communication and supply device BKN	Cable 1m, connected to terminals 1, 2 and 4 Actuator connected on the terminals 2 and 5 Cable 1m, connected to terminals 1, 2, 4 and 5

III. DIMENSIONS

FDMA with manual control

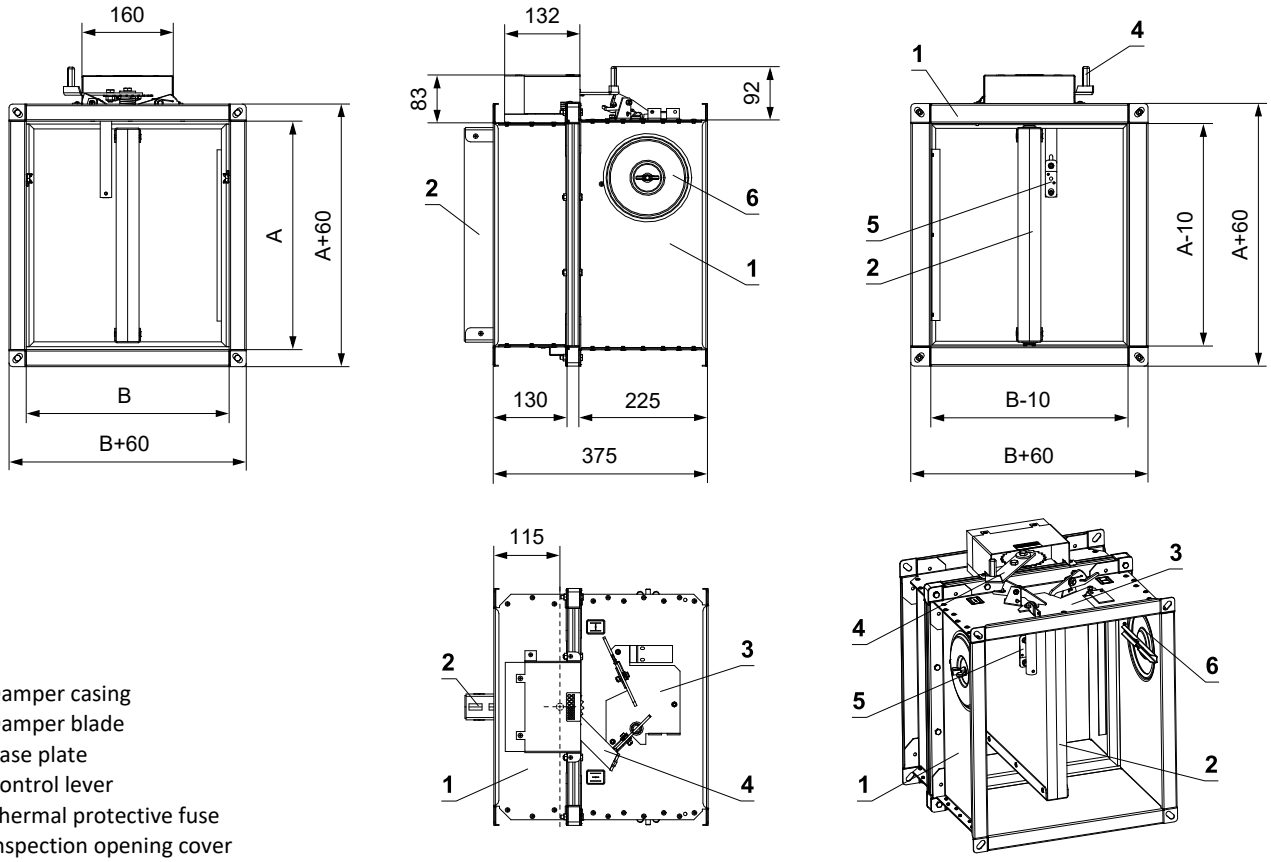

1 Damper casing
2 Damper blade
3 Base plate
4 Control lever
5 Thermal protective fuse
6 Inspection opening cover

FDMA with spring return actuator

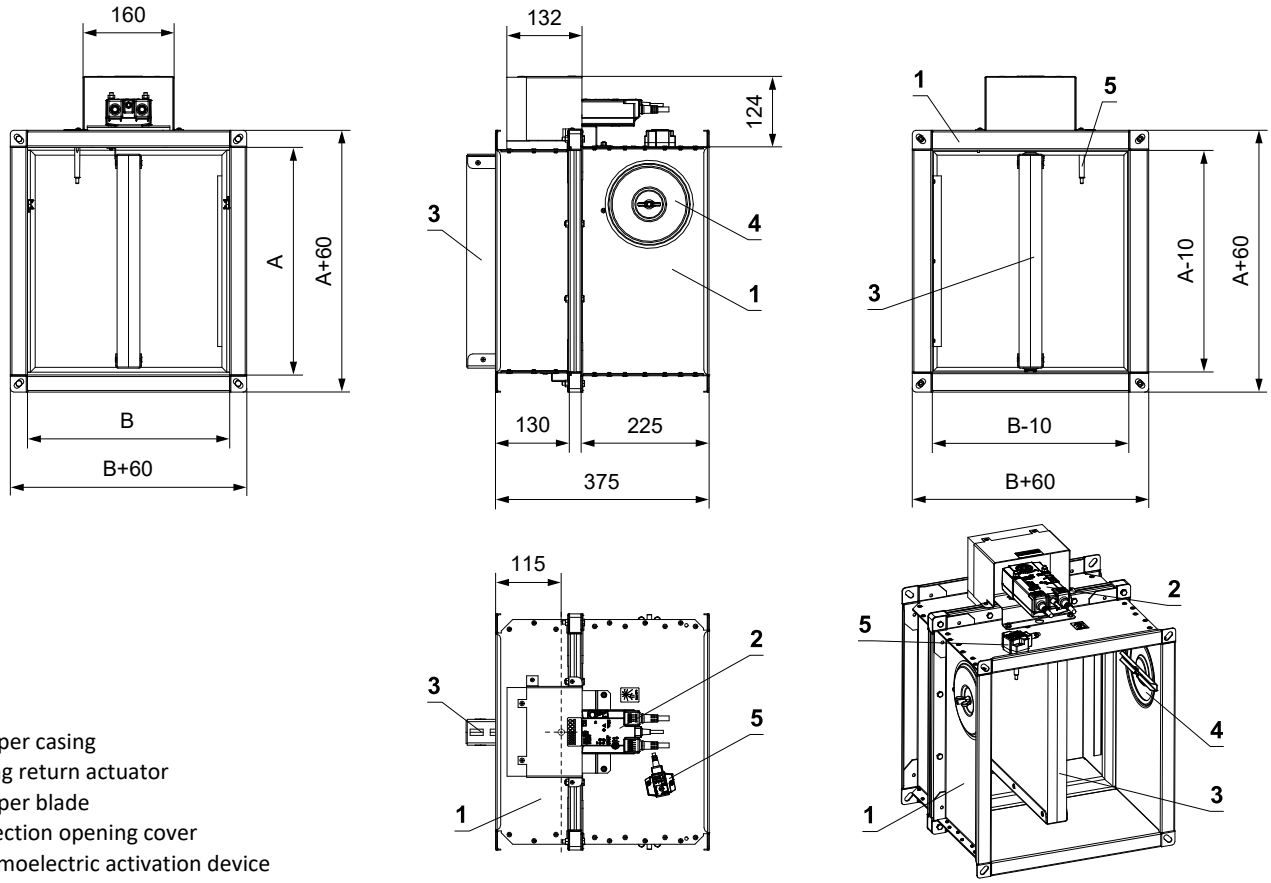

1 Damper casing
2 Spring return actuator
3 Damper blade
4 Inspection opening cover
5 Thermoelectric activation device

Damper blade overlaps

- Open damper blade overlaps the damper casing by the value “a” or “c”. These values are specified in chapter Technical parameters → see pages 18 to 23

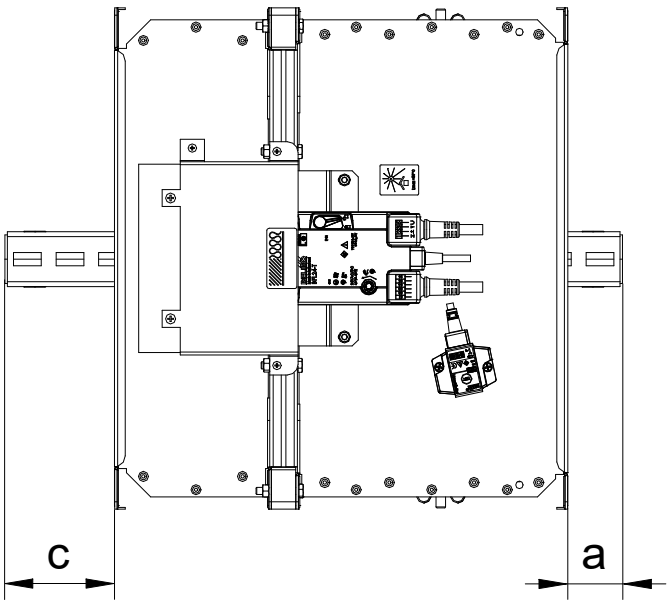

Values "a" and "c" has to be respected when projecting following air-conditioning duct.

Flange of a damper - CONTROL SIDE

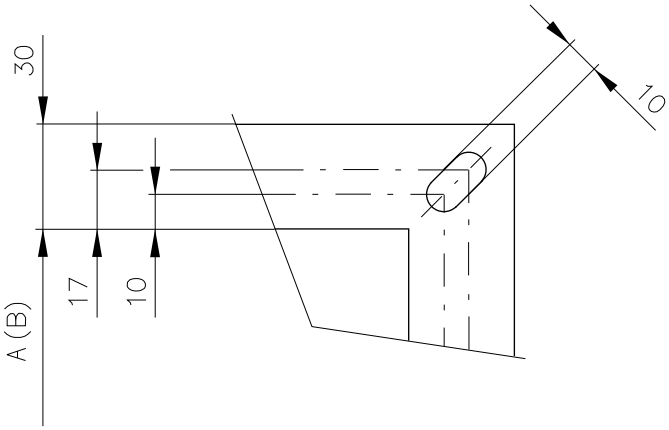

Flange of a damper - INSTALLATION SIDE

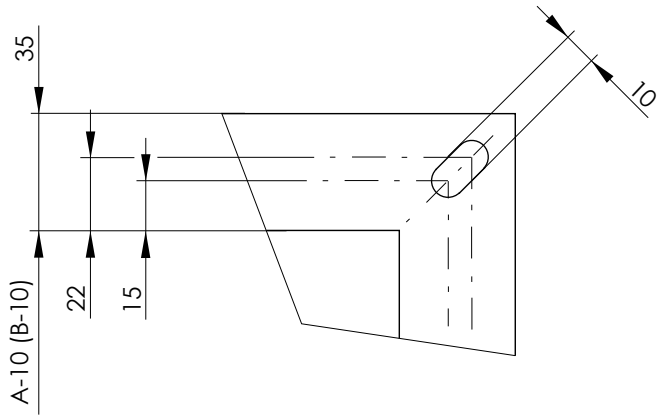

flanges are fitted with oval holes in the corners

Technical parameters

A x B [mm]		Damper blade overlaps a [mm]	Damper blade overlaps c [mm]	Weight Man. [kg]	Weight Actu. [kg]*	Free area S_f [m²]	Spring return actuator
180 x	180	-	-	9	10,7	0,0192	BFL
	200	-	-	9,4	11,1	0,0224	
	225	-	-	9,9	11,6	0,0264	
	250	-	5	10,5	12,2	0,0304	
	280	-	20	11,1	12,8	0,0352	
	300	-	30	11,5	13,2	0,0384	
	315	-	37	11,8	13,5	0,0408	
	355	-	57	12,7	14,4	0,0472	
	400	-	80	13,6	15,3	0,0544	
	450	-	105	14,6	17,6	0,0624	
	500	-	130	15,7	18,7	0,0704	
	550	10	155	16,7	19,7	0,0784	
	560	15	160	16,9	19,9	0,0800	
	600	35	180	17,8	20,8	0,0864	
	630	50	195	18,4	21,4	0,0912	
	650	60	205	18,8	21,8	0,0944	
	700	85	230	19,9	22,9	0,1024	BFN
	710	90	235	20,1	23,1	0,1040	
	750	110	255	20,9	23,9	0,1104	
	800	135	280	22	25	0,1184	
200 x	180	-	-	9,4	11,1	0,0216	BFL
	200	-	-	9,8	11,5	0,0252	
	225	-	-	10,3	12	0,0297	
	250	-	5	10,9	12,6	0,0396	
	280	-	20	11,5	13,2	0,0342	
	300	-	30	12	13,7	0,0432	
	315	-	37	12,3	14	0,0459	
	355	-	57	13,1	14,8	0,0531	
	400	-	80	14,1	15,8	0,0612	
	450	-	105	15,2	18,2	0,0702	
	500	-	130	16,3	19,3	0,0792	
	550	10	155	17,4	20,4	0,0882	
	560	15	160	17,6	20,6	0,0900	
	600	35	180	18,4	21,4	0,0972	
	630	50	195	19,1	22,1	0,1026	
	650	60	205	19,5	22,5	0,1062	
	700	85	230	20,6	23,6	0,1152	BFN
	710	90	235	20,8	23,8	0,1170	
	750	110	255	21,7	24,7	0,1242	
	800	135	280	22,8	25,8	0,1332	
	900	185	330	24,9	27,9	0,1512	
	1000	235	380	27,1	30,1	0,1692	
225 x	180	-	-	9,8	11,5	0,0246	BFL
	200	-	-	10,3	12	0,0287	
	225	-	-	10,8	12,5	0,0338	
	250	-	5	11,4	13,1	0,0390	
	280	-	20	12,1	13,8	0,0451	
	300	-	30	12,5	14,2	0,0492	
	315	-	37	12,9	14,6	0,0523	
	355	-	57	13,8	15,5	0,0605	
	400	-	80	14,8	16,5	0,0697	
	450	-	105	15,9	18,9	0,0800	
	500	-	130	17	20	0,0902	
225 x	550	10	155	18,2	21,2	0,1005	BFL
	560	15	160	18,4	21,4	0,1025	
	600	35	180	19,3	22,3	0,1107	
	630	50	195	20	23	0,1169	BFN
	650	60	205	20,4	23,4	0,1210	
	700	85	230	21,5	24,5	0,1312	
	710	90	235	21,8	24,8	0,1333	
	750	110	255	22,7	25,7	0,1415	
	800	135	280	23,8	26,8	0,1517	
	900	185	330	26	29	0,1722	
	1000	235	380	28,3	31,3	0,1927	BF
250 x	180	-	-	10,3	12	0,0276	BFL
	200	-	-	10,7	12,4	0,0322	
	225	-	-	11,3	13	0,0380	
	250	-	5	11,9	13,6	0,0437	
	280	-	20	12,6	14,3	0,0506	
	300	-	30	13,1	14,8	0,0552	
	315	-	37	13,4	15,1	0,0587	
	355	-	57	14,4	16,1	0,0679	
	400	-	80	15,4	17,1	0,0782	
	450	-	105	16,6	19,6	0,0897	
	500	-	130	17,8	20,8	0,1012	
	550	10	155	18,9	21,9	0,1127	
	560	15	160	19,2	22,2	0,1150	
	600	35	180	20,1	23,1	0,1242	BFN
	630	50	195	20,8	23,8	0,1311	
	650	60	205	21,3	24,3	0,1357	
	700	85	230	22,5	25,5	0,1472	
	710	90	235	22,7	25,7	0,1495	
	750	110	255	23,6	26,6	0,1587	
	800	135	280	24,8	27,8	0,1702	
	900	185	330	27,2	30,2	0,1932	
	1000	235	380	29,5	32,5	0,2162	BF
280 x	180	-	-	10,8	12,5	0,0312	BFL
	200	-	-	11,3	13	0,0364	
	225	-	-	11,9	13,6	0,0429	
	250	-	5	12,5	14,2	0,0494	
	280	-	20	13,3	15	0,0572	
	300	-	30	13,8	15,5	0,0624	
	315	-	37	14,1	15,8	0,0663	
	355	-	57	15,1	16,8	0,0767	
	400	-	80	16,2	17,9	0,0884	
	450	-	105	17,4	20,4	0,1014	
	500	-	130	18,7	21,7	0,1144	
	550	10	155	19,9	22,9	0,1274	
	560	15	160	20,1	23,1	0,1300	BFN
	600	35	180	21,1	24,1	0,1404	
	630	50	195	21,9	24,9	0,1482	
	650	60	205	22,4	25,4	0,1534	
	700	85	230	23,6	26,6	0,1664	
	710	90	235	23,8	26,8	0,1690	
	750	110	255	24,8	27,8	0,1794	
	800	135	280	26	29	0,1924	

Sizes in increments of 5 mm can be manufactured on request.

* *For designs with BKN a weight of 0.5 kg must be added.*

A x B [mm]		Damper blade overlaps a [mm]	Damper blade overlaps c [mm]	Weight Man. [kg]	Weight Actu. [kg]*	Free area S_f [m²]	Spring return actuator
280 x	900	185	330	28,5	31,5	0,2184	BF
	1000	235	380	30,9	33,9	0,2444	
300 x	180	-	-	11,2	12,9	0,0336	BFL
	200	-	-	11,7	13,4	0,0392	
	225	-	-	12,3	14	0,0462	
	250	-	5	13	14,7	0,0532	
	280	-	20	13,7	15,4	0,0616	
	300	-	30	14,2	15,9	0,0672	
	315	-	37	14,6	16,3	0,0714	
	355	-	57	15,6	17,3	0,0826	
	400	-	80	16,8	18,5	0,0952	
	450	-	105	18	21	0,1092	
	500	-	130	19,3	22,3	0,1232	
	550	10	155	20,5	23,5	0,1372	BFN
	560	15	160	20,8	23,8	0,1400	
	600	35	180	21,8	24,8	0,1512	
	630	50	195	22,6	25,6	0,1596	
	650	60	205	23,1	26,1	0,1652	
	700	85	230	24,3	27,3	0,1792	
	710	90	235	24,6	27,6	0,1820	
	750	110	255	25,6	28,6	0,1932	
	800	135	280	26,8	29,8	0,2072	
	900	185	330	29,4	32,4	0,2352	BF
	1000	235	380	31,9	34,9	0,2632	
315 x	180	-	-	11,5	13,2	0,0354	BFL
	200	-	-	12	13,7	0,0413	
	225	-	-	12,6	14,3	0,0487	
	250	-	5	13,3	15	0,0561	
	280	-	20	14,1	15,8	0,0649	
	300	-	30	14,6	16,3	0,0708	
	315	-	37	15	16,7	0,0752	
	355	-	57	16	17,7	0,0870	
	400	-	80	17,1	18,8	0,1003	
	450	-	105	18,4	21,4	0,1151	
	500	-	130	19,7	22,7	0,1298	
	550	10	155	21	24	0,1446	BFN
	560	15	160	21,3	24,3	0,1475	
	600	35	180	22,3	25,3	0,1593	
	630	50	195	23,1	26,1	0,1682	
	650	60	205	23,6	26,6	0,1741	
	700	85	230	24,9	27,9	0,1888	
	710	90	235	25,1	28,1	0,1918	
	750	110	255	26,2	29,2	0,2036	
	800	135	280	27,5	30,5	0,2183	
	900	185	330	30	33	0,2478	BF
	1000	235	380	32,6	35,6	0,2773	
355 x	180	-	-	12,2	13,9	0,0402	BFL
	200	-	-	12,8	14,5	0,0469	
	225	-	-	13,4	15,1	0,0553	
	250	-	5	14,1	15,8	0,0737	
	280	-	20	14,9	16,6	0,0637	
	300	-	30	15,5	17,2	0,0804	
	315	-	37	15,9	17,6	0,0854	
	355	-	57	17	18,7	0,0988	
	400	-	80	18,2	19,9	0,1139	
	450	-	105	19,6	22,6	0,1307	BFL
	500	-	130	20,9	23,9	0,1474	BFN
	550	10	155	22,3	25,3	0,1642	
	560	15	160	22,6	25,6	0,1675	
	600	35	180	23,6	26,6	0,1809	
	630	50	195	24,5	27,5	0,1910	
	650	60	205	25	28	0,1977	
	700	85	230	26,4	29,4	0,2144	
	710	90	235	26,6	29,6	0,2178	
	750	110	255	27,7	30,7	0,2312	
	800	135	280	29,1	32,1	0,2479	BF
	900	185	330	31,8	34,8	0,2814	
	1000	235	380	34,5	37,5	0,3149	
400 x	180	-	-	13	14,7	0,0456	BFL
	200	-	-	13,6	15,3	0,0532	
	225	-	-	14,3	16	0,0627	
	250	-	5	15,1	16,8	0,0722	
	280	-	20	15,9	17,6	0,0836	
	300	-	30	16,5	18,2	0,0912	
	315	-	37	16,9	18,6	0,0969	
	355	-	57	18,1	19,8	0,1121	
	400	-	80	19,4	21,1	0,1292	
	450	-	105	20,8	23,8	0,1482	
	500	-	130	22,3	25,3	0,1672	BFN
	550	10	155	23,7	26,7	0,1862	
	560	15	160	24	27	0,1900	
	600	35	180	25,1	28,1	0,2052	
	630	50	195	26	29	0,2166	
	650	60	205	26,6	29,6	0,2242	
	700	85	230	28	31	0,2432	
	710	90	235	28,3	31,3	0,2470	
	750	110	255	29,5	32,5	0,2622	BF
	800	135	280	30,9	33,9	0,2812	
	900	185	330	33,8	36,8	0,3192	
	1000	235	380	36,7	39,7	0,3572	
450 x	180	-	-	14	15,7	0,0516	BFL
	200	-	-	14,6	16,3	0,0602	
	225	-	-	15,3	17	0,0710	
	250	-	5	16,1	17,8	0,0817	
	280	-	20	17	18,7	0,0946	
	300	-	30	17,6	19,3	0,1032	
	315	-	37	18,1	19,8	0,1097	
	355	-	57	19,3	21	0,1269	
	400	-	80	20,7	22,4	0,1462	
	450	-	105	22,2	25,2	0,1677	BFN
	500	-	130	23,8	26,8	0,1892	
	550	10	155	25,3	28,3	0,2107	
	560	15	160	25,6	28,6	0,2150	
	600	35	180	26,8	29,8	0,2322	
	630	50	195	27,7	30,7	0,2451	
	650	60	205	28,4	31,4	0,2537	
	700	85	230	29,9	32,9	0,2752	BF
	710	90	235	30,2	33,2	0,2795	
	750	110	255	31,4	34,4	0,2967	
	800	135	280	33	36	0,3182	

Sizes in increments of 5 mm can be manufactured on request.

* *For designs with BKN a weight of 0.5 kg must be added.*

A x B [mm]		Damper blade overlaps a [mm]	Damper blade overlaps c [mm]	Weight Man. [kg]	Weight Actu. [kg]*	Free area S_f [m²]	Spring return actuator
450 x	900	185	330	36	39	0,3612	BF
	1000	235	380	39,1	42,1	0,4042	
500 x	180	-	-	14,9	16,6	0,0576	BFL
	200	-	-	15,5	17,2	0,0672	
	225	-	-	16,3	18	0,0792	
	250	-	5	17,1	18,8	0,0912	
	280	-	20	18,1	19,8	0,1056	
	300	-	30	18,8	20,5	0,1152	
	315	-	37	19,3	21	0,1224	
	355	-	57	20,6	22,3	0,1416	
	400	-	80	22	23,7	0,1632	
	450	-	105	23,6	26,6	0,1872	BFN
	500	-	130	25,3	28,3	0,2112	
	550	10	155	26,9	29,9	0,2352	
	560	15	160	27,2	30,2	0,2400	
	600	35	180	28,5	31,5	0,2592	
	630	50	195	29,5	32,5	0,2736	
	650	60	205	30,1	33,1	0,2832	BF
	700	85	230	31,7	34,7	0,3072	
	710	90	235	32,1	35,1	0,3120	
	750	110	255	33,4	36,4	0,3312	
	800	135	280	35	38	0,3552	
	900	185	330	38,2	41,2	0,4032	
	1000	235	380	41,5	44,5	0,4512	
550 x	180	-	-	15,8	17,5	0,0636	BFL
	200	-	-	16,5	18,2	0,0742	
	225	-	-	17,3	19	0,0875	
	250	-	5	18,2	19,9	0,1007	
	280	-	20	19,2	20,9	0,1166	
	300	-	30	19,9	21,6	0,1272	
	315	-	37	20,4	22,1	0,1352	
	355	-	57	21,8	23,5	0,1564	
	400	-	80	23,3	25	0,1802	BFN
	450	-	105	25	28	0,2067	
	500	-	130	26,8	29,8	0,2332	
	550	10	155	28,5	31,5	0,2597	
	560	15	160	28,8	31,8	0,2650	
	600	35	180	30,2	33,2	0,2862	
	630	50	195	31,2	34,2	0,3021	BF
	650	60	205	31,9	34,9	0,3127	
	700	85	230	33,6	36,6	0,3392	
	710	90	235	33,9	36,9	0,3445	
	750	110	255	35,3	38,3	0,3657	
	800	135	280	37	40	0,3922	
	900	185	330	40,4	43,4	0,4452	
550 x	1000	235	380	43,9	46,9	0,4982	
560 x	180	-	-	16	17,7	0,0648	BFL
	200	-	-	16,7	18,4	0,0756	
	225	-	-	17,5	19,2	0,0891	
	250	-	5	18,4	20,1	0,1026	
	280	-	20	19,4	21,1	0,1188	
	300	-	30	20,1	21,8	0,1296	
	315	-	37	20,7	22,4	0,1377	
	355	-	57	22	23,7	0,1593	
	400	-	80	23,6	25,3	0,1836	BFN
560 x	450	-	105	25,3	28,3	0,2106	BFN
	500	-	130	27,1	30,1	0,2376	
	550	10	155	28,8	31,8	0,2646	
	560	15	160	29,1	32,1	0,2700	
	600	35	180	30,5	33,5	0,2916	
	630	50	195	31,6	34,6	0,3078	BF
	650	60	205	32,2	35,2	0,3186	
	700	85	230	34	37	0,3456	
	710	90	235	34,3	37,3	0,3510	
	750	110	255	35,7	38,7	0,3726	
	800	135	280	37,4	40,4	0,3996	
560 x	900	185	330	40,9	43,9	0,4536	
	1000	235	380	44,4	47,4	0,5076	
600 x	180	-	-	16,7	19,7	0,0696	BFL
	200	-	-	17,4	20,4	0,0812	
	225	-	-	18,3	21,3	0,0957	
	250	-	5	19,2	22,2	0,1102	
	280	-	20	20,3	23,3	0,1276	
	300	-	30	21	24	0,1392	
	315	-	37	21,6	24,6	0,1479	
	355	-	57	23	26	0,1711	
	400	-	80	24,6	27,6	0,1972	BFN
	450	-	105	26,4	29,4	0,2262	
	500	-	130	28,3	31,3	0,2552	
	550	10	155	30,1	33,1	0,2842	
	560	15	160	30,4	33,4	0,2900	
	600	35	180	31,9	34,9	0,3132	BF
	630	50	195	32,9	35,9	0,3306	
	650	60	205	33,7	36,7	0,3422	
	700	85	230	35,5	38,5	0,3712	
	710	90	235	35,8	38,8	0,3770	
	750	110	255	37,3	40,3	0,4002	
	800	135	280	39,1	42,1	0,4292	
600 x	900	185	330	42,7	45,7	0,4872	
	1000	235	380	46,3	49,3	0,5452	
630 x	180	-	-	17,3	20,3	0,0732	BFL
	200	-	-	18	21	0,0854	
	225	-	-	18,9	21,9	0,1007	
	250	-	5	19,9	22,9	0,1159	
	280	-	20	21	24	0,1342	
	300	-	30	21,7	24,7	0,1464	
	315	-	37	22,3	25,3	0,1556	
	355	-	57	23,8	26,8	0,1800	
	400	-	80	25,4	28,4	0,2074	BFN
	450	-	105	27,3	30,3	0,2379	
	500	-	130	29,1	32,1	0,2684	
	550	10	155	31	34	0,2989	
	560	15	160	31,4	34,4	0,3050	
	600	35	180	32,9	35,9	0,3294	BF
	630	50	195	34	37	0,3477	
	650	60	205	34,7	37,7	0,3599	
	700	85	230	36,6	39,6	0,3904	
	710	90	235	36,9	39,9	0,3965	
	750	110	255	38,4	41,4	0,4209	
630 x	800	135	280	40,3	43,3	0,4514	

Sizes in increments of 5 mm can be manufactured on request.

* *For designs with BKN a weight of 0.5 kg must be added.*

A x B [mm]		Damper blade overlaps a [mm]	Damper blade overlaps c [mm]	Weight Man. [kg]	Weight Actu. [kg]*	Free area S_f [m²]	Spring return actuator
630 x	900	185	330	44	47	0,5124	BF
	1000	235	380	47,7	50,7	0,5734	
650 x	180	-	-	17,6	20,6	0,0756	BFL
	200	-	-	18,4	21,4	0,0882	
	225	-	-	19,3	22,3	0,1040	
	250	-	5	20,3	23,3	0,1197	
	280	-	20	21,4	24,4	0,1386	
	300	-	30	22,2	25,2	0,1512	
	315	-	37	22,7	25,7	0,1607	
	355	-	57	24,3	27,3	0,1859	
	400	-	80	26	29	0,2142	BFN
	450	-	105	27,9	30,9	0,2457	
	500	-	130	29,7	32,7	0,2772	
	550	10	155	31,6	34,6	0,3087	
	560	15	160	32	35	0,3150	BF
	600	35	180	33,5	36,5	0,3402	
	630	50	195	34,7	37,7	0,3591	
	650	60	205	35,4	38,4	0,3717	
	700	85	230	37,3	40,3	0,4032	
	710	90	235	37,7	40,7	0,4095	
	750	110	255	39,2	42,2	0,4347	
650 x	800	135	280	41,1	44,1	0,4662	
	900	185	330	44,9	47,9	0,5292	
	1000	235	380	48,7	51,7	0,5922	
700 x	180	-	-	18,6	21,6	0,0816	BFL
	200	-	-	19,4	22,4	0,0952	
	225	-	-	20,3	23,3	0,1122	
	250	-	5	21,3	24,3	0,1292	
	280	-	20	22,5	25,5	0,1496	
	300	-	30	23,3	26,3	0,1632	
	315	-	37	23,9	26,9	0,1734	
	355	-	57	25,5	28,5	0,2006	BFN
	400	-	80	27,3	30,3	0,2312	
	450	-	105	29,3	32,3	0,2652	
	500	-	130	31,2	34,2	0,2992	
	550	10	155	33,2	36,2	0,3332	BF
	560	15	160	33,6	36,6	0,3400	
	600	35	180	35,2	38,2	0,3672	
	630	50	195	36,4	39,4	0,3876	
	650	60	205	37,2	40,2	0,4012	
	700	85	230	39,2	42,2	0,4352	
	710	90	235	39,6	42,6	0,4420	
700 x	750	110	255	41,2	44,2	0,4692	
	800	135	280	43,1	46,1	0,5032	
	900	185	330	47,1	50,1	0,5712	
	1000	235	380	51,1	54,1	0,6392	
710 x	180	-	-	18,7	21,7	0,0828	BFL
	200	-	-	19,5	22,5	0,0966	
	225	-	-	20,5	23,5	0,1139	
	250	-	5	21,5	24,5	0,1311	
	280	-	20	22,7	25,7	0,1518	
	300	-	30	23,5	26,5	0,1656	
	315	-	37	24,1	27,1	0,1760	
	355	-	57	25,7	28,7	0,2036	BFN
	400	-	80	27,5	30,5	0,2346	
710 x	450	-	105	29,5	32,5	0,2691	BFN
	500	-	130	31,5	34,5	0,3036	
	550	10	155	33,5	36,5	0,3381	BF
	560	15	160	33,9	36,9	0,3450	
	600	35	180	35,5	38,5	0,3726	
	630	50	195	36,7	39,7	0,3933	
	650	60	205	37,5	40,5	0,4071	
	700	85	230	39,5	42,5	0,4416	
710 x	710	90	235	39,9	42,9	0,4485	
	750	110	255	41,5	44,5	0,4761	
	800	135	280	43,5	46,5	0,5106	
	900	185	330	47,5	50,5	0,5796	
	1000	235	380	51,5	54,5	0,6486	
750 x	180	-	-	19,5	22,5	0,0876	BFL
	200	-	-	20,3	23,3	0,1022	
	225	-	-	21,3	24,3	0,1205	
	250	-	5	22,4	25,4	0,1387	
	280	-	20	23,6	26,6	0,1606	
	300	-	30	24,5	27,5	0,1752	
	315	-	37	25,1	28,1	0,1862	
	355	-	57	26,7	29,7	0,2154	BFN
	400	-	80	28,6	31,6	0,2482	
	450	-	105	30,7	33,7	0,2847	
	500	-	130	32,7	35,7	0,3212	
	550	10	155	34,8	37,8	0,3577	BF
	560	15	160	35,2	38,2	0,3650	
	600	35	180	36,9	39,9	0,3942	
	630	50	195	38,1	41,1	0,4161	
	650	60	205	39	42	0,4307	
750 x	700	85	230	41	44	0,4672	
	710	90	235	41,4	44,4	0,4745	
	750	110	255	43,1	46,1	0,5037	
	800	135	280	45,2	48,2	0,5402	
	900	185	330	49,3	52,3	0,6132	
	1000	235	380	53,5	56,5	0,6862	
800 x	180	-	-	20,4	23,4	0,0936	BFL
	200	-	-	21,3	24,3	0,1092	
	225	-	-	22,3	25,3	0,1287	
	250	-	5	23,4	26,4	0,1482	
	280	-	20	24,7	27,7	0,1716	
	300	-	30	25,6	28,6	0,1872	
	315	-	37	26,2	29,2	0,1989	
	355	-	57	28	31	0,2301	BFN
	400	-	80	29,9	32,9	0,2652	
	450	-	105	32,1	35,1	0,3042	
	500	-	130	34,2	37,2	0,3432	
	550	10	155	36,4	39,4	0,3822	BF
	560	15	160	36,8	39,8	0,3900	
	600	35	180	38,6	41,6	0,4212	
800 x	630	50	195	39,9	42,9	0,4446	
	650	60	205	40,7	43,7	0,4602	
	700	85	230	42,9	45,9	0,4992	
	710	90	235	43,3	46,3	0,5070	
	750	110	255	45	48	0,5382	
	800	135	280	47,2	50,2	0,5772	

Sizes in increments of 5 mm can be manufactured on request.

* *For designs with BKN a weight of 0.5 kg must be added.*

A x B [mm]		Damper blade overlaps a [mm]	Damper blade overlaps c [mm]	Weight Man. [kg]	Weight Actu. [kg]*	Free area S_f [m²]	Spring return actuator
800 x	900	185	330	51,5	54,5	0,6552	BF
	1000	235	380	55,9	58,9	0,7332	
900 x	180	-	-	22,2	25,2	0,1056	BFL
	200	-	-	23,2	26,2	0,1232	
	225	-	-	24,3	27,3	0,1452	
	250	-	5	25,5	28,5	0,1672	
	280	-	20	26,9	29,9	0,1936	
	300	-	30	27,9	30,9	0,2112	
	315	-	37	28,6	31,6	0,2244	BFN
	355	-	57	30,4	33,4	0,2596	
	400	-	80	32,5	35,5	0,2992	
	450	-	105	34,9	37,9	0,3432	
	500	-	130	37,2	40,2	0,3872	BF
	550	10	155	39,6	42,6	0,4312	
	560	15	160	40	43	0,4400	
	600	35	180	41,9	44,9	0,4752	
	630	50	195	43,3	46,3	0,5016	
	650	60	205	44,3	47,3	0,5192	
	700	85	230	46,6	49,6	0,5632	
	710	90	235	47,1	50,1	0,5720	
	750	110	255	48,9	51,9	0,6072	
	800	135	280	51,3	54,3	0,6512	
	900	185	330	56	59	0,7392	
	1000	235	380	60,6	63,6	0,8272	
1000 x	180	-	-	24,1	27,1	0,1176	BFL
	200	-	-	25,1	28,1	0,1372	
	225	-	-	26,4	29,4	0,1617	
	250	-	5	27,6	30,6	0,1862	
	280	-	20	29,1	32,1	0,2156	
	300	-	30	30,1	33,1	0,2352	BFN
	315	-	37	30,9	33,9	0,2499	
	355	-	57	32,9	35,9	0,2891	
	400	-	80	35,2	38,2	0,3332	
	450	-	105	37,7	40,7	0,3822	
	500	-	130	40,2	43,2	0,4312	BF
	550	10	155	42,7	45,7	0,4802	
	560	15	160	43,2	46,2	0,4900	
	600	35	180	45,3	48,3	0,5292	
	630	50	195	46,8	49,8	0,5586	
	650	60	205	47,8	50,8	0,5782	
	700	85	230	50,3	53,3	0,6272	
	710	90	235	50,8	53,8	0,6370	
	750	110	255	52,8	55,8	0,6762	
	800	135	280	55,3	58,3	0,7252	
	900	185	330	60,4	63,4	0,8232	
	1000	235	380	65,4	68,4	0,9212	
1100 x	180	-	-	25,9	28,9	0,1296	BFL
	200	-	-	27	30	0,1512	
	225	-	-	28,4	31,4	0,1782	
	250	-	5	29,7	32,7	0,2052	
	280	-	20	31,3	34,3	0,2376	
	300	-	30	32,4	35,4	0,2592	BFN
	315	-	37	33,2	36,2	0,2754	
	355	-	57	35,4	38,4	0,3186	
	400	-	80	37,8	40,8	0,3672	

A x B [mm]		Damper blade overlaps a [mm]	Damper blade overlaps c [mm]	Weight Man. [kg]	Weight Actu. [kg]*	Free area S_f [m²]	Spring return actuator
1100 x	450	-	105	40,5	43,5	0,4212	BF
	500	-	130	43,2	46,2	0,4752	
	550	10	155	45,9	48,9	0,5292	
	560	15	160	46,5	49,5	0,5400	
	600	35	180	48,6	51,6	0,5832	
	630	50	195	50,2	53,2	0,6156	
	650	60	205	51,3	54,3	0,6372	
	700	85	230	54	57	0,6912	
	710	90	235	54,6	57,6	0,7020	
	750	110	255	56,7	59,7	0,7452	
	800	135	280	59,4	62,4	0,7992	
	900	185	330	64,8	67,8	0,9072	
	1000	235	380	70,2	73,2	1,0152	
1250 x	180	-	-	28,7	31,7	0,1476	BFL
	200	-	-	29,9	32,9	0,1722	
	225	-	-	31,4	34,4	0,2030	
	250	-	5	32,8	35,8	0,2337	
	280	-	20	34,6	37,6	0,2706	BFN
	300	-	30	35,8	38,8	0,2952	
	315	-	37	36,7	39,7	0,3137	
	355	-	57	39,1	42,1	0,3629	
	400	-	80	41,8	44,8	0,4182	
	450	-	105	44,7	47,7	0,4797	BF
	500	-	130	47,7	50,7	0,5412	
	550	10	155	50,7	53,7	0,6027	
	560	15	160	51,3	54,3	0,6150	
	600	35	180	53,6	56,6	0,6642	
	630	50	195	55,4	58,4	0,7011	
	650	60	205	56,6	59,6	0,7257	
	700	85	230	59,6	62,6	0,7872	
	710	90	235	60,2	63,2	0,7995	
	750	110	255	62,6	65,6	0,8487	
	800	135	280	65,5	68,5	0,9102	
	900**	185	330	71,5	74,5	1,0332	
	1000**	235	380	77,4	80,4	1,1562	
1400 x	180	-	-	31,4	34,4	0,1656	BFL
	200	-	-	32,7	35,7	0,1932	
	225	-	-	34,4	37,4	0,2277	
	250	-	5	36	39	0,2622	BFN
	280	-	20	37,9	40,9	0,3036	
	300	-	30	39,2	42,2	0,3312	
	315	-	37	40,2	43,2	0,3519	
	355	-	57	42,8	45,8	0,4071	
	400	-	80	45,7	48,7	0,4692	BF
	450	-	105	48,9	51,9	0,5382	
	500	-	130	52,2	55,2	0,6072	
	550	10	155	55,4	58,4	0,6762	
	560	15	160	56,1	59,1	0,6900	
	600	35	180	58,7	61,7	0,7452	
	630**	50	195	60,6	63,6	0,7866	
	650**	60	205	61,9	64,9	0,8142	
	700**	85	230	65,2	68,2	0,8832	
	710**	90	235	65,8	68,8	0,8970	
	750**	110	255	68,4	71,4	0,9522	
	800**	135	280	71,6	74,6	1,0212	

Sizes in increments of 5 mm can be manufactured on request.

* *For designs with BKN a weight of 0.5 kg must be added.*

** *Two closing springs are used for these dimensions.*

A x B [mm]		Damper blade overlaps a [mm]	Damper blade overlaps c [mm]	Weight Man. [kg]	Weight Actu. [kg]*	Free area S_f [m²]	Spring return actuator
1400 x	900**	185	330	78,1	81,1	1,1592	BF
	1000**	235	380	84,6	87,6	1,2972	
1500 x	180	-	-	33,3	36,3	0,1776	BFL
	200	-	-	34,7	37,7	0,2072	
	225	-	-	36,4	39,4	0,2442	
	250	-	5	38,1	41,1	0,2812	BFN
	280	-	20	40,1	43,1	0,3256	
	300	-	30	41,5	44,5	0,3552	
	315	-	37	42,5	45,5	0,3774	
	355	-	57	45,3	48,3	0,4366	
	400	-	80	48,3	51,3	0,5032	BF
	450	-	105	51,8	54,8	0,5772	
	500	-	130	55,2	58,2	0,6512	
	550	10	155	58,6	61,6	0,7252	
	560	15	160	59,3	62,3	0,7400	
	600	35	180	62	65	0,7992	
	630**	50	195	64,1	67,1	0,8436	
	650**	60	205	65,4	68,4	0,8732	
	700**	85	230	68,9	71,9	0,9472	
	710**	90	235	69,6	72,6	0,9620	
	750**	110	255	72,3	75,3	1,0212	
	800**	135	280	75,7	78,7	1,0952	
1500 x	900**	185	330	82,6	85,6	1,2432	

A x B [mm]		Damper blade overlaps a [mm]	Damper blade overlaps c [mm]	Weight Man. [kg]	Weight Actu. [kg]*	Free area S_f [m²]	Spring return actuator
1500 x	1000**	235	380	89,4	92,4	1,3912	BF
1600 x	180	-	-	35,1	38,1	0,1896	BFL
	200	-	-	36,6	39,6	0,2212	
	225	-	-	38,4	41,4	0,2607	
	250	-	5	40,2	43,2	0,3002	BFN
	280	-	20	42,3	45,3	0,3476	
	300	-	30	43,8	46,8	0,3792	
	315	-	37	44,8	47,8	0,4029	
	355	-	57	47,7	50,7	0,4661	
	400	-	80	51	54	0,5372	BF
	450	-	105	54,6	57,6	0,6162	
	500	-	130	58,2	61,2	0,6952	
	550	10	155	61,8	64,8	0,7742	
	560	15	160	62,5	65,5	0,7900	
	600	35	180	65,4	68,4	0,8532	
	630**	50	195	67,5	70,5	0,9006	
	650**	60	205	69	72	0,9322	
	700**	85	230	72,6	75,6	1,0112	
	710**	90	235	73,3	76,3	1,0270	
	750**	110	255	76,2	79,2	1,0902	
	800**	135	280	79,8	82,8	1,1692	
	900**	185	330	87	90	1,3272	
	1000**	235	380	94,2	97,2	1,4852	

Sizes in increments of 5 mm can be manufactured on request.

** For designs with BKN a weight of 0.5 kg must be added.*

*** Two closing springs are used for these dimensions.*

IV. INSTALLATION

Placement and installation

- The fire dampers are suitable for installation in arbitrary position in vertical and horizontal passages of fire separating constructions. The damper installation procedures must be done so that all load transfer from the fire separating constructions to the damper is absolutely excluded. Following air-conditioning duct must be suspended or supported so that all load transfer from the following duct to the fire damper is absolutely excluded. The gap between the installed damper and the fire separating construction must be perfectly filled with approved material.
- The damper must be installed so that the damper blade (in closed position) is situated in the fire separating construction - marked by the label BUILT-IN EDGE on the damper casing. If such solution is not possible, the duct between the fire separating construction and the damper blade must be protected according to the certified installation method → see pages 27 to 40
- During the installation and plastering process, the actuating mechanism must be protected (covered) against damage and pollution. The damper casing should not be deformed during bricking in. Once the damper is built in, the damper blade should not grind against the damper casing during opening or closing.
- The distance between the fire damper and the construction (wall, ceiling) must be 75 mm at the minimum, according to EN 1366-2. If two or more dampers are to be installed in one fire separating construction, the distance between adjacent dampers must be 200 mm at the minimum, according to EN 1366-2.

Minimum distance between the fire dampers and the construction

- minimum distance 200 mm between dampers, according to EN 1366-2
- minimum distance 75 mm between damper and construction (wall/ceiling), according to EN 1366-2
- recommended minimum distance 150 mm necessary for access to the actuator
- recommended minimum distance 250 mm necessary for access to the manual control and electrical components

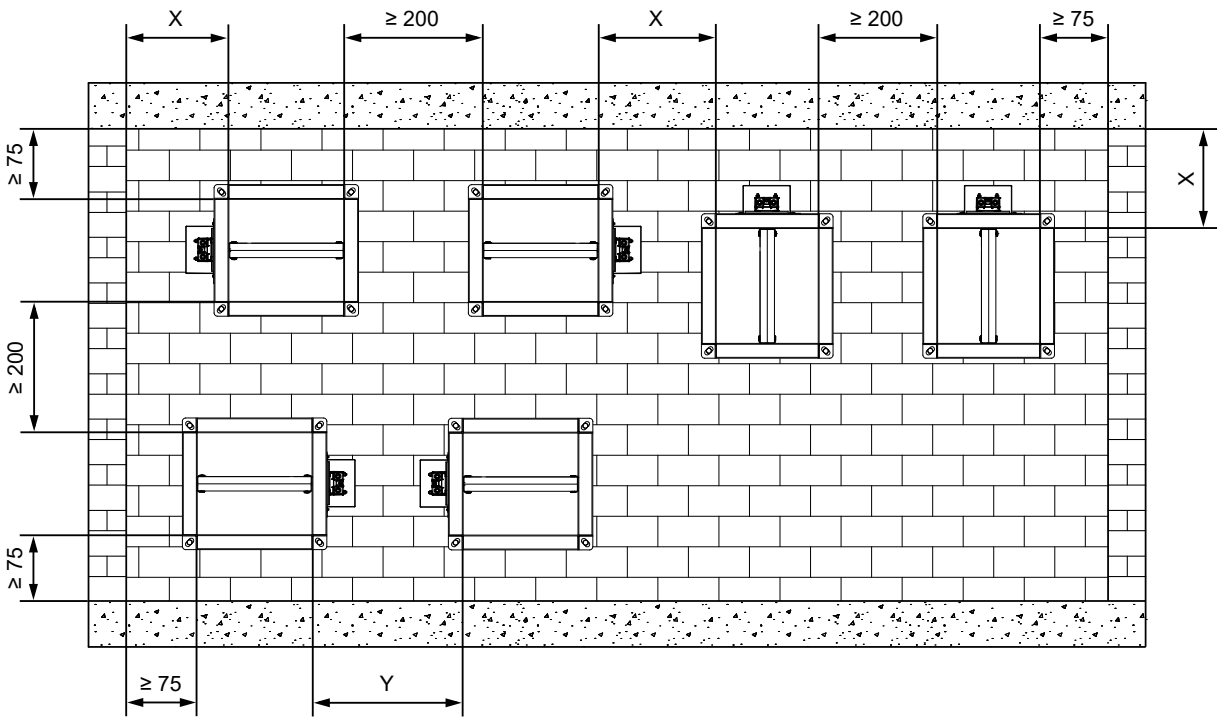

X = recommended min. distance for actuator ≥ 150 mm
X = recommended min. distance for manual control and electrical components ≥ 250 mm

Y = min. distance for actuator ≥ 200 mm acc. to EN 1366-2
Y = recommended min. distance for manual control and electrical components ≥ 250 mm

Built in edge

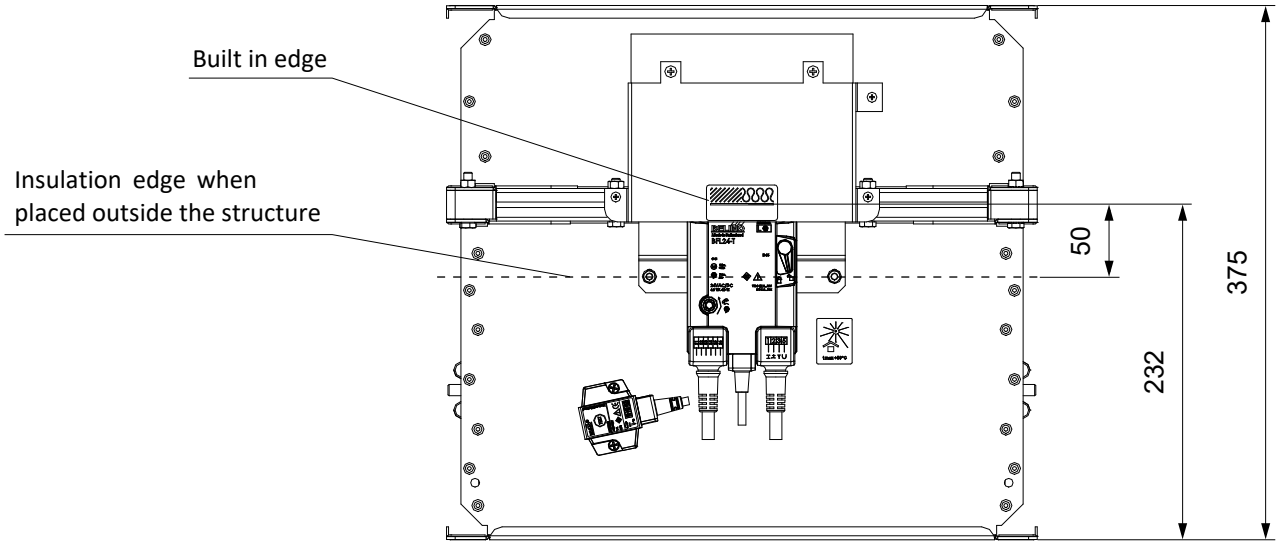

Dimensions of an installation opening

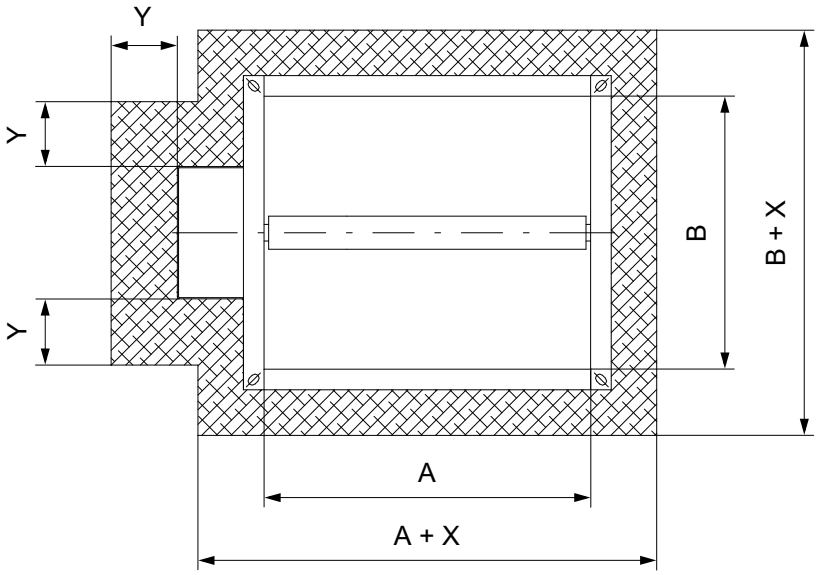

Dimensions of an installation opening with two springs

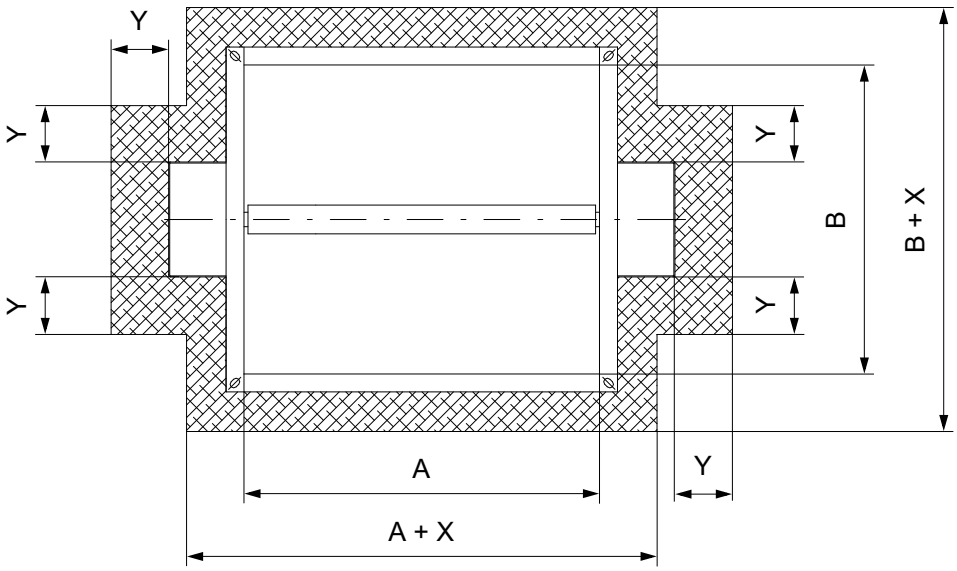

Mortar or gypsum

X = min. A(B)+100
X = max. A(B)+300

Y = min. 50
Y = max. 150

Ablative Coated Batt

X = min. A(B)+100
X = max. A(B)+400

Y = min. 50
Y = max. 200

Stuffing box with fire protective boards

X = min. A(B)+80
X = max. A(B)+150

Y = min. 40
Y = max. 75

Statement of installations

Fire separating construction, location of the damper	Installation type, installation system	Gap width [mm]	Fire resistance	Page
Standard low- and high-density rigid wall construction according to EN 1363-1 ● damper in the wall ● 100 mm min. wall thickness	Mortar or gypsum	50–150	EI 90 (v_e i↔o) S	27
	Ablative Coated Batt	50–200		28
	Stuffing box with fire protective boards	40–75		29
Standard low- and high-density rigid wall construction according to EN 1363-1 ● damper remote from the wall ● 100 mm min. wall thickness	Insulation of the duct with ISOVER ULTIMATE PROTECT th. 80 mm – Ablative Coated Batt	40–75	EI 60 (v_e i↔o) S	30
	Insulation of the duct with Rockwool Conlit Ductrock EIS 90 th. 60mm – Stuffing box with fire protective boards	40–75	EI 90 (v_e i↔o) S	31
Standard flexible wall construction min. EI 90 according to EN 1363-1. ● damper in the wall ● 100 mm min. wall thickness	Mortar or gypsum	50–150	EI 90 (v_e i↔o) S	32
	Ablative Coated Batt	50–200		33
	Stuffing box with fire protective boards	40–75		34
Standard flexible wall construction min. EI 90 according to EN 1363-1 ● damper remote from the wall ● 100 mm min. wall thickness	Insulation of the duct with ISOVER ULTIMATE PROTECT th. 80 mm – Ablative Coated Batt	40–75	EI 60 (v_e i↔o) S	35
	Insulation of the duct with Rockwool Conlit Ductrock EIS 90 th. 60mm – Stuffing box withfire protective boards	40–75	EI 90 (v_e i↔o) S	36
Standard low- and high-density rigid floor construction according to EN 1366-2 ● damper in the ceiling ● 150 mm min. ceiling thickness	Mortar or gypsum	50–150	EI 90 (h_o i↔o) S	37
	Ablative Coated Batt	50–200		38
	Stuffing box with fire protective boards	40–75		39
Standard low- and high-density rigid floor construction according to EN 1366-2 ● damper remote from the ceiling ● 150 mm min. ceiling thickness	Insulation of the duct with Rockwool Conlit Ductrock EIS 90 th. 60 mm – Mortar or gypsum	50–150	EI 90 (h_o i↔o) S	40

In solid wall construction

In solid wall construction - mortar or gypsum

EI 90 (v_e i↔o) S

- Standard low- and high-density rigid wall construction according to EN 1363-1
- For connection of following duct → see page 44

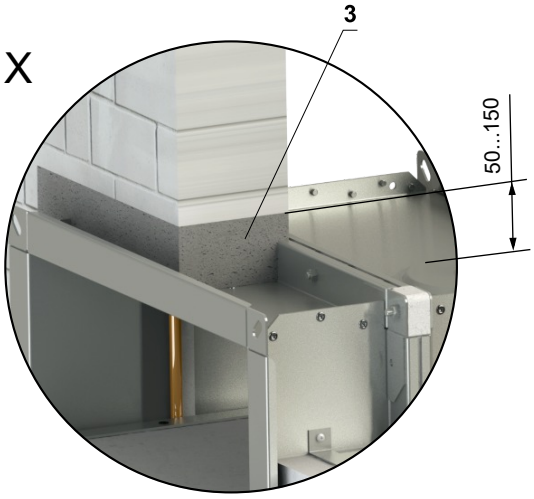

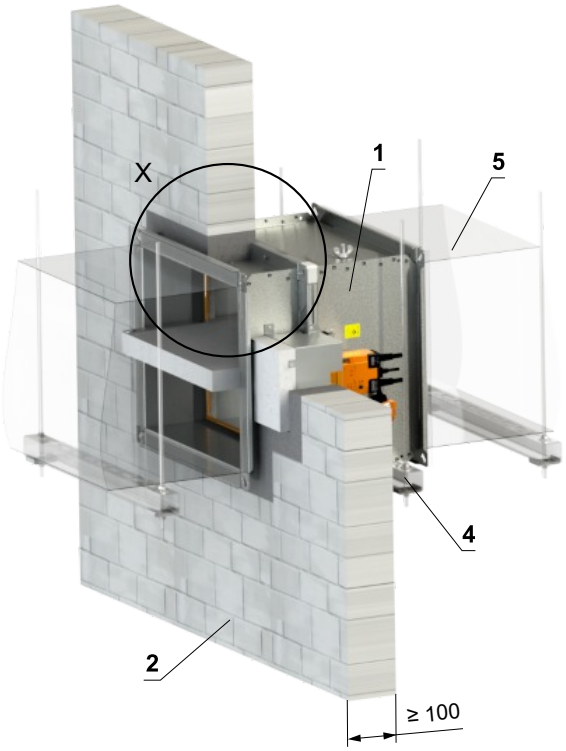

W = min. 50 mm
W = max. 150 mm

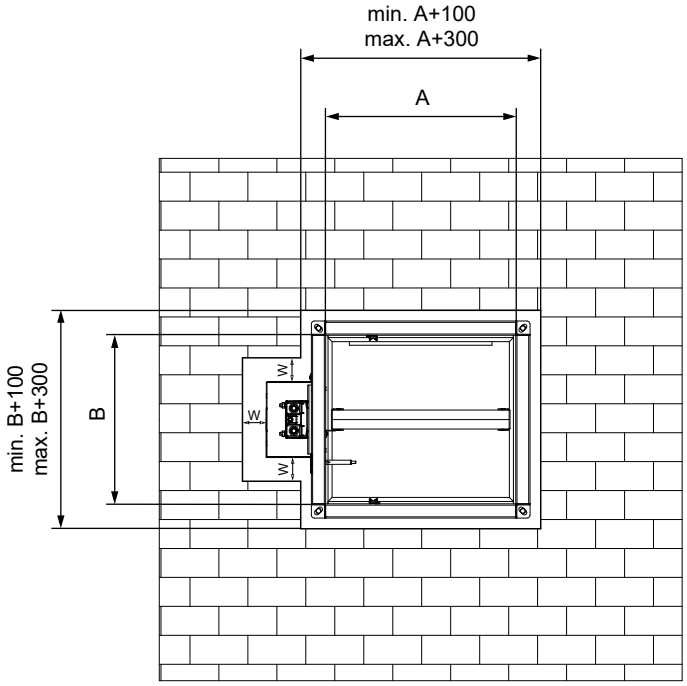

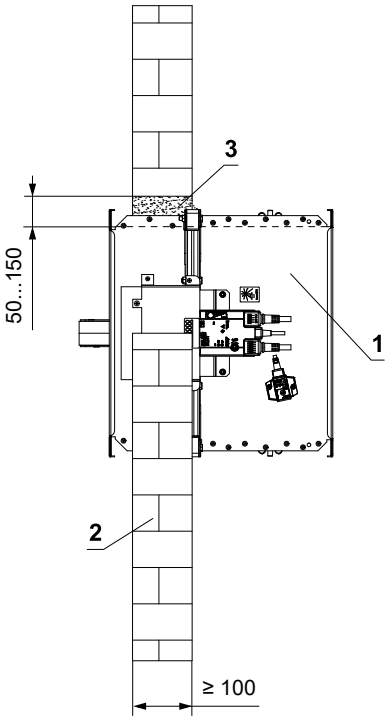

1 FDMA
2 Solid wall construction
3 Mortar or gypsum
4 Profile with threaded rod → see pages 41 to 43
5 Duct

In solid wall construction - Ablative Coated Batt

EI 90 (v_e i↔o) S

- Standard low- and high-density rigid wall construction according to EN 1363-1
- For connection of following duct → see page 44

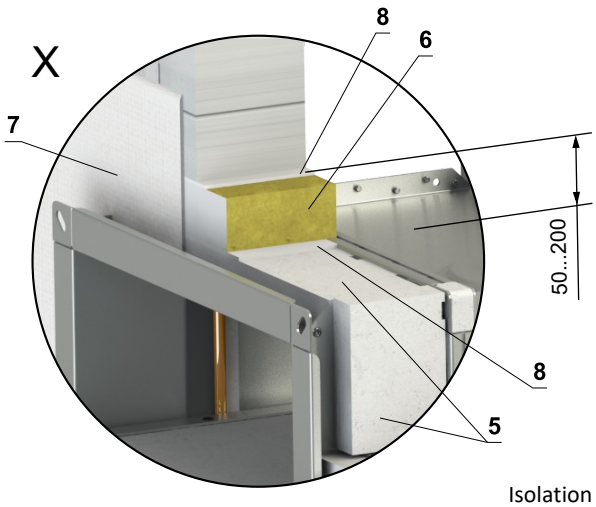

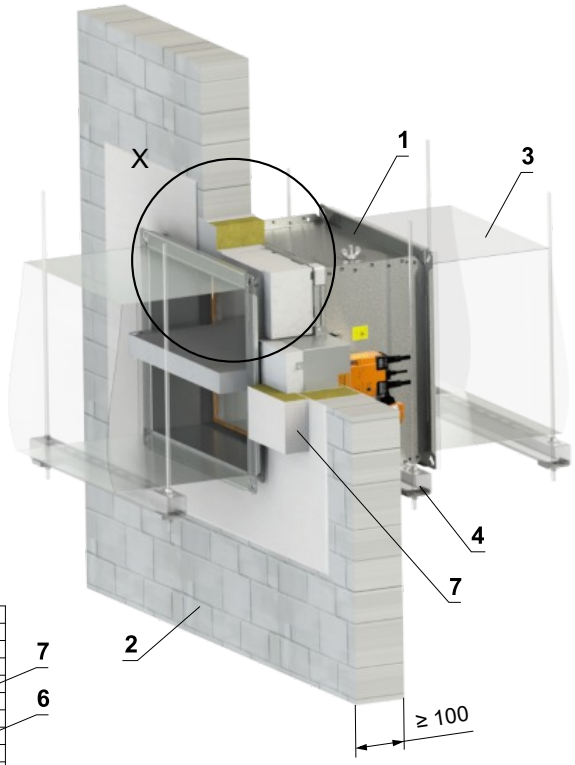

Isolation cover of actuator

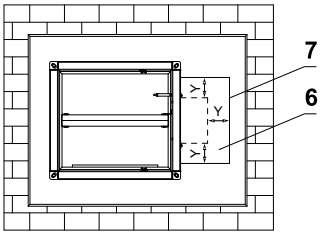

W = min. 50 mm
W = max. 200 mm
Y = min. 100 mm

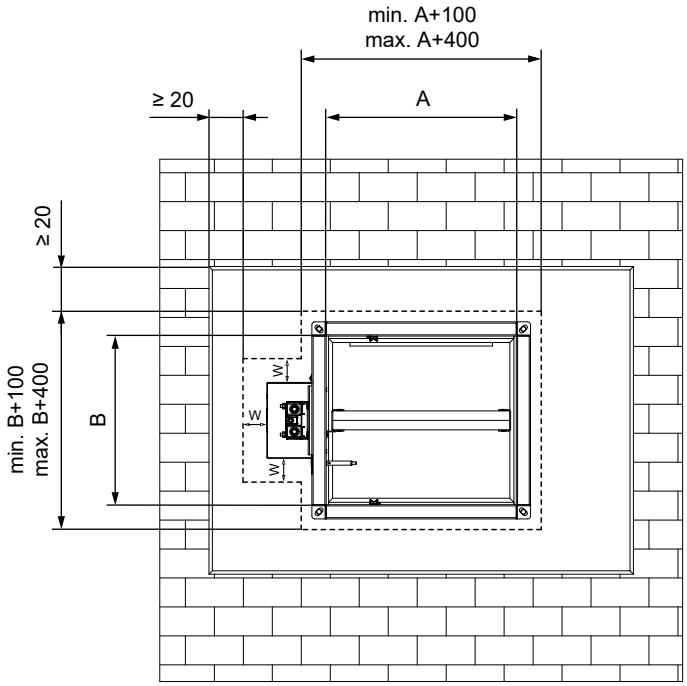

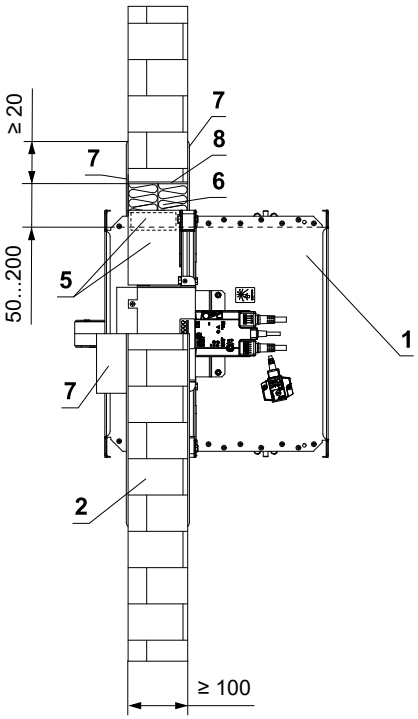

1 FDMA
2 Solid wall construction
3 Duct
4 Profile with threaded rod → see pages 41 to 43
5 Protective cladding board - min. th. 30 mm, min. density 750 kg/m³ (e.g. PROMATECT-MST) → see page 52
Ablative Coated Batt System HILTI*
6 Mineral wool board - min. density 140 kg/m³ (HILTI CFS-CT B 1S 140/50...)
7 Fire stop coating - th. 1 mm (HILTI CFS-CT...) - coating is overcoated on the support construction and on the damper casing/duct
8 Fire-resistant mastic - (HILTI CFS-S ACR...) fill the gap from both sides of the fire separation construction and around the perimeter of penetration and damper casing

* HILTI system can be replaced by a similar system with the same or higher thickness, density, fire reaction class, tested according to EN 1366-3.

In solid wall construction - mineral wool with fire-resistant coating and fire-resistance boards **EI 90 (v_e i↔o) S**

- Standard low- and high-density rigid wall construction according to EN 1363-1
- For connection of following duct→ see page 44

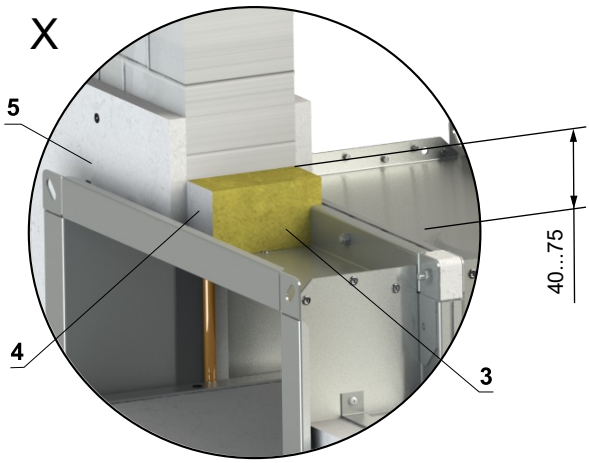

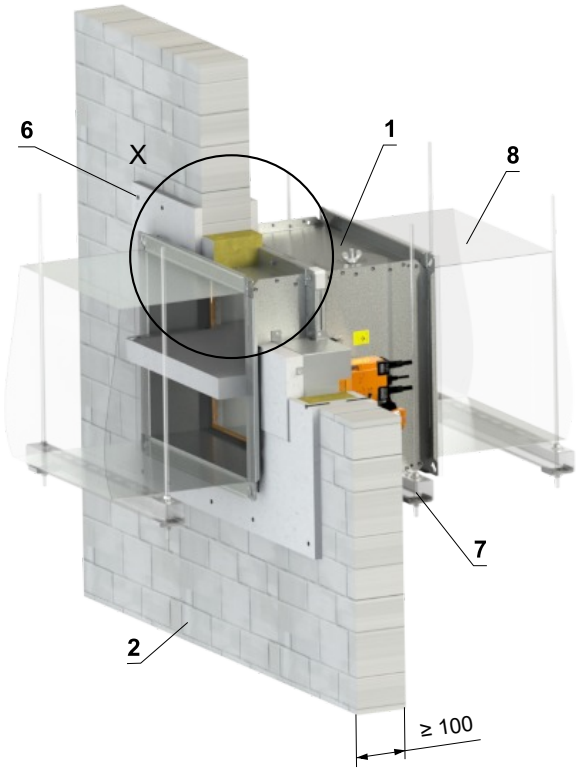

W = min. 40 mm
W = max. 75 mm

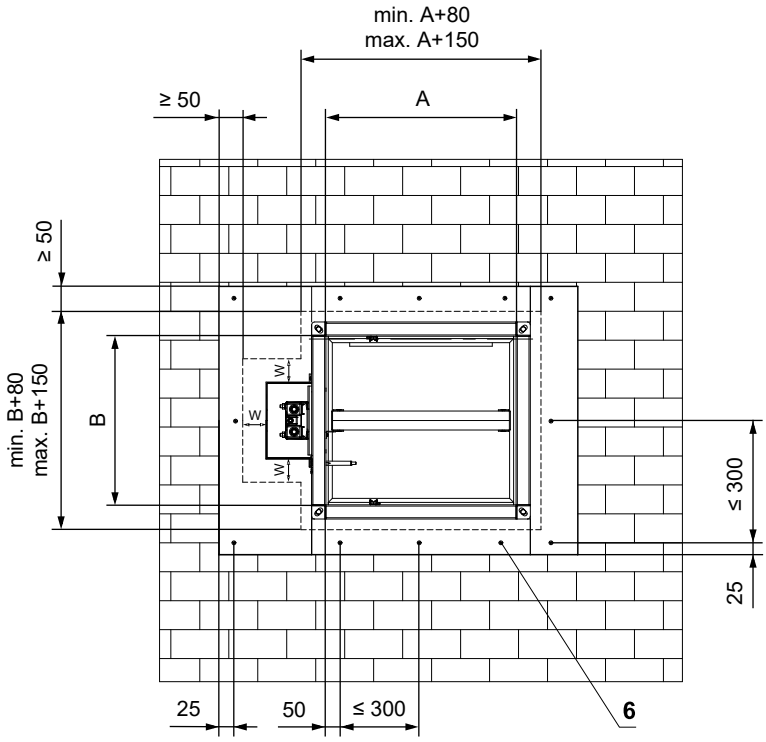

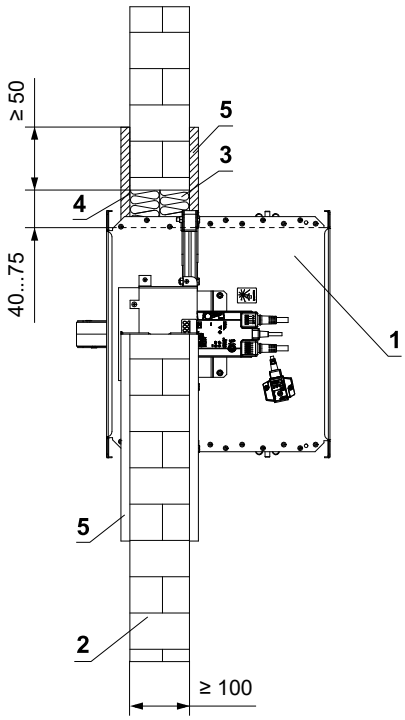

1 FDMA
2 Solid wall construction
3 Mineral wool board - min. density 140 kg/m³ (e.g. PROMAPYR-T150, ROCKWOOL HARDROCK / STEPROCK HD)
4 Fire-resistant coating - th. 1 mm (e.g. PROMASTOP-I)
5 Fire-resistant board - min. th. 15 mm, min. density 870 kg/m³ (e.g. PROMATECT-H)
6 Screw 4x50 mm - screws must be fixed in the wall construction, use steel anchors if necessary
7 Profile with threaded rod → see pages 41 to 43
8 Duct

Installation outside solid wall construction

Outside solid wall construction - ISOVER Ultimate Protect - Ablative Coated Batt

EI 60 (v_e i↔o) S

- Standard low- and high-density rigid wall construction according to EN 1363-1
- For connection of following duct → see page 44
- Minimum and maximum distance between the wall and fire damper is unlimited
- When installing the insulation, follow the ISOVER manufacturer's instructions
- The damper and the duct must be suspended separately
- The duct must be suspended on both sides of damper acc. to national rules
- Duct between fire damper and fire separating construction must be suspended by using threaded rods and mounting profiles, or another mounting system acc. to national standards
- Load of the suspension system depends on weight of the fire damper and duct system → see page 41
- Max. distance between two suspension systems is 1500 mm
- Duct at the point of penetration must be fixed to the fire separation structure
- Following air-conditioning duct must be suspended or supported so that all load transfer from the following duct to the fire damper is absolutely excluded. Adjacent duct must be suspended or supported, as required by the duct suppliers
- If the threaded rod is located inside the duct insulation, distance between threaded rod and duct is max 30 mm
- If the threaded rod is located outside the duct isolation, distance between threaded rod and isolation is max. 40 mm

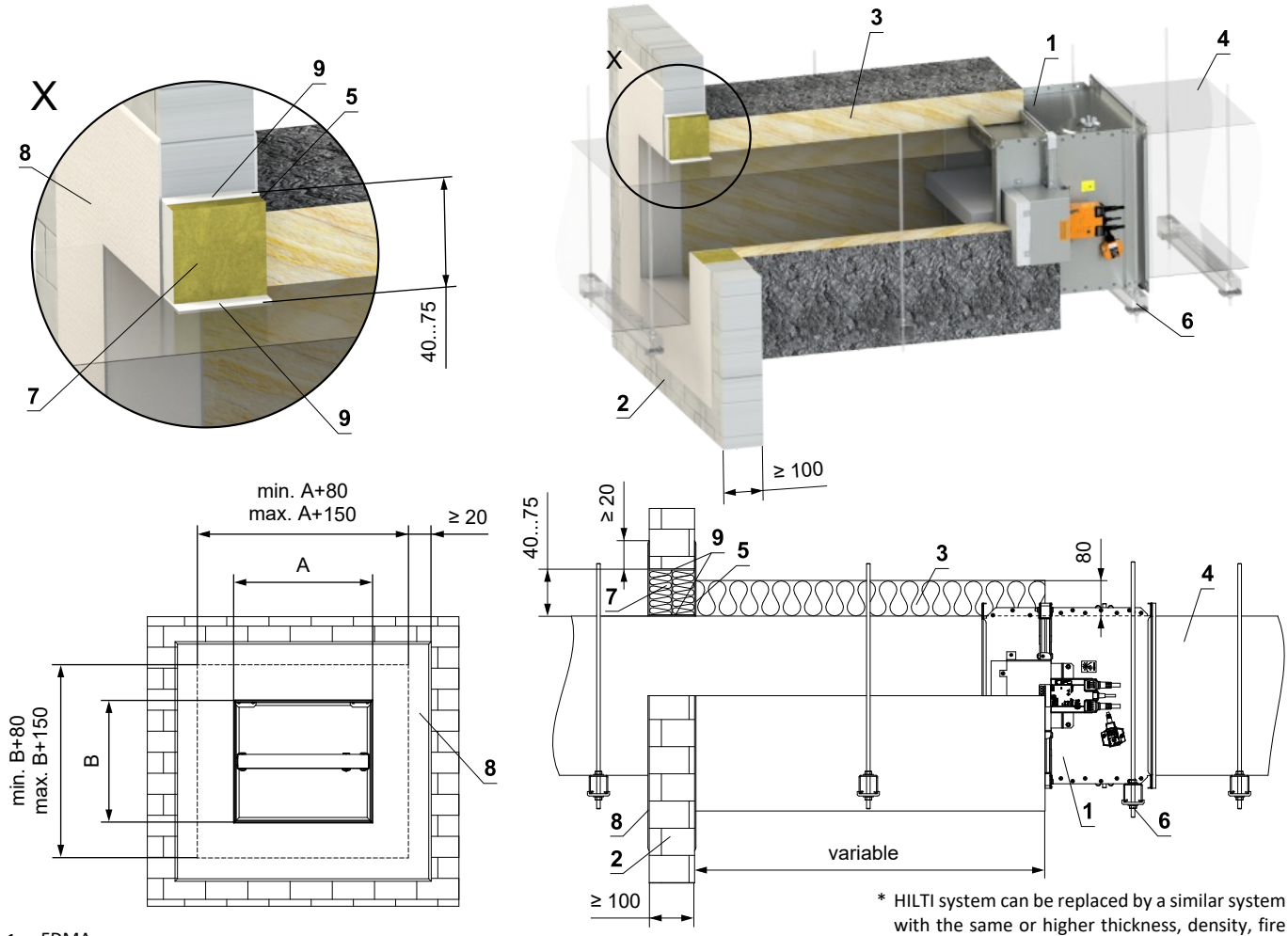

* HILTI system can be replaced by a similar system with the same or higher thickness, density, fire reaction class, tested according to EN 1366-3.

1 FDMA
2 Solid wall construction
3 Insulation board made of mineral wool, with a surface treatment of aluminum foil, min. thickness 80 mm, min. density 66 kg/m³ (System ISOVER Ultimate Protect Wired Mat 4.0 Alu1)
4 Standard air duct made of galvanized sheet metal, thickness according to damper size – the duct must be anchored on both sides of the fire-separating structure, e.g. using L-profiles 30 × 30 × 3 mm – according to the ISOVER manufacturer's instructions
5 ISOVER Protect BSK glue - apply on the insulation and fix it to the fire separation construction
6 Profile with threaded rod → see pages 41 to 43
Ablative Coated Batt System HILTI*
7 Mineral wool board - min. density 140 kg/m³ (HILTI CFS-CT B 1S 140/50...)
8 Fire stop coating - th. 1 mm (HILTI CFS-CT...) - coating is overcoated on the support construction and on the damper casing/duct
9 Fire-resistant mastic - (HILTI CFS-S ACR...) fill the gap from both sides of the fire separation construction and around the perimeter of penetration and damper casing

Outside solid wall construction - mineral wool ROCKWOOL - mineral wool with fire-resistant coating and fire-resistant board

EI 90 (v_e i↔o) S

- Standard low- and high-density rigid wall construction according to EN 1363-1
- For connection of following duct → see page 44
- Minimum and maximum distance between the wall and fire damper is unlimited
- When installing the insulation, follow the ROCKWOOL manufacturer's instructions
- The damper and the duct must be suspended separately
- The duct must be suspended on both sides of damper acc. to national rules
- Duct between fire damper and fire separating construction must be suspended by using threaded rods and mounting profiles, or another mounting system acc. to national standards
- Load of the suspension system depends on weight of the fire damper and duct system → see page 41
- Max. distance between two suspension systems is 1500 mm
- Duct at the point of penetration must be fixed to the fire separation structure
- Following air-conditioning duct must be suspended or supported so that all load transfer from the following duct to the fire damper is absolutely excluded. Adjacent duct must be suspended or supported, as required by the duct suppliers
- If the threaded rod is located inside the duct insulation, distance between threaded rod and duct is max 30 mm
- If the threaded rod is located outside the duct isolation, distance between threaded rod and isolation is max. 40 mm
- For this installation VRM-Q reinforcement frame must be used → see page 51

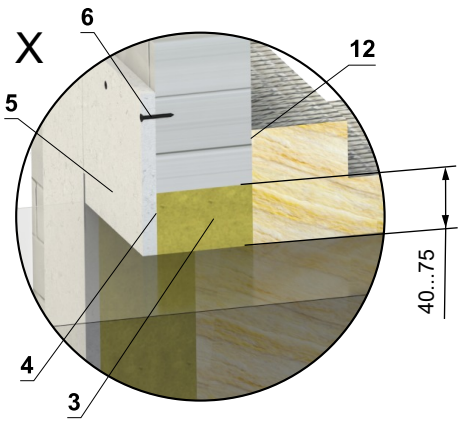

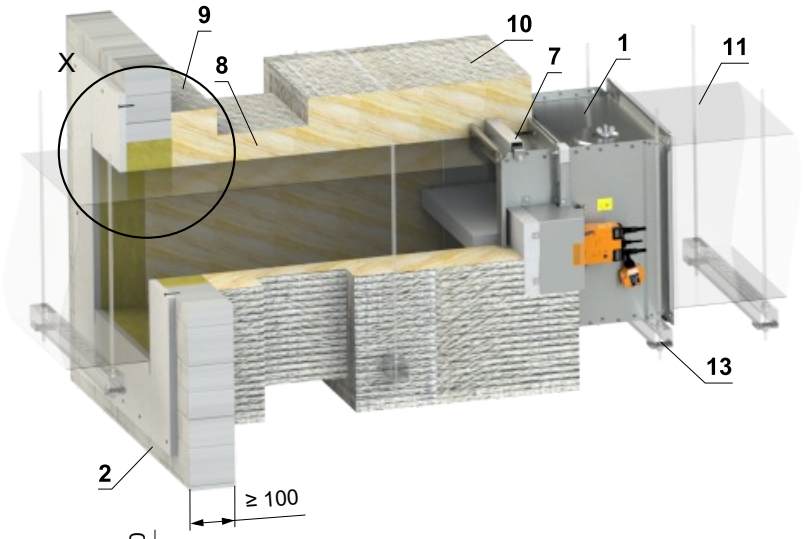

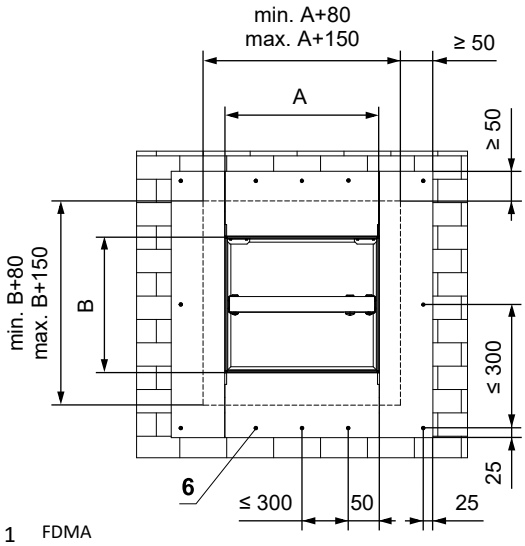

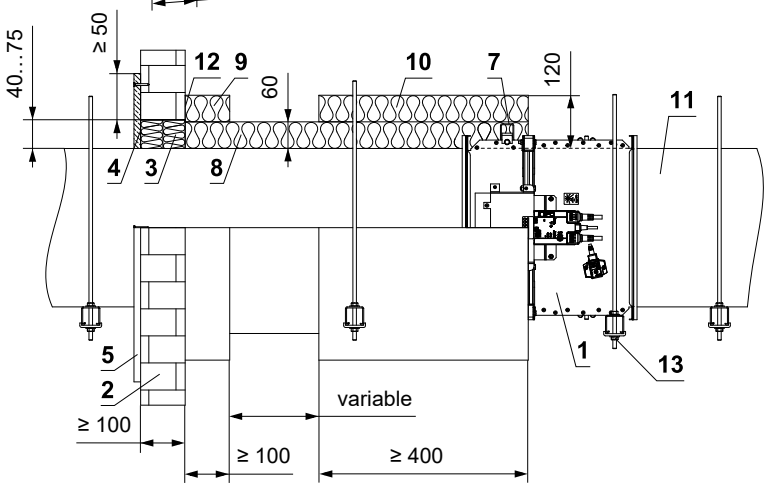

1 FDMA

2 Solid wall construction

3 Mineral wool board - min. density 140 kg/m³ (e.g. PROMAPYR-T150, ROCKWOOL HARDROCK / STEPROCK HD)

4 Fire-resistant coating - th. 1 mm (e.g. PROMASTOP-I)

5 Fire-resistant board - min. th. 15 mm, min. density 870 kg/m³ (e.g. PROMATECT-H)

6 Screw 4x50 mm - screws must be fixed in the wall construction, use steel anchors if necessary

7 VRM-Q → see page 51

8 Insulation board made of mineral wool, with a surface treatment of aluminum foil - th. 60 mm, min. density 300 kg/m³ - (System ROCKWOOL Conlit Ductrock 90)

9 Duct penetration insulation collar - th. 60 mm (System ROCKWOOL Conlit Ductrock 90) - glued (pos. 12) and fixed with screws to the wall construction

10 Insulation collar of the damper and duct connection - th. 60 mm (System ROCKWOOL Conlit Ductrock 90)

11 Standard air duct made of galvanized sheet metal, thickness according to damper size – the duct must be anchored on both sides of the fire-separating structure, e.g. using L-profiles 30 × 30 × 3 mm – according to the ISOVER manufacturer's instructions

12 ROCKWOOL Firepro glue - apply on the insulation and fix it to the fire separation construction

13 Profile with threaded rod → see pages 41 to 43

In gypsum wall construction

In gypsum wall construction min. EI 90 - mortar or gypsum

EI 90 (v_e i↔o) S

- Standard flexible wall construction min. EI 90 according to EN 1363-1.
- For connection of following duct → see page 44
- The installation opening is lined with a UW/CW profile.

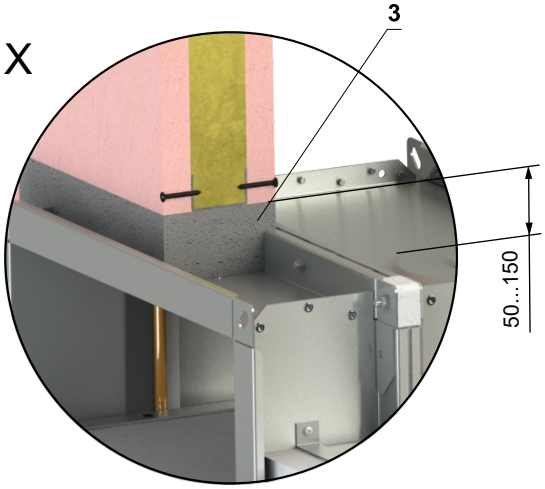

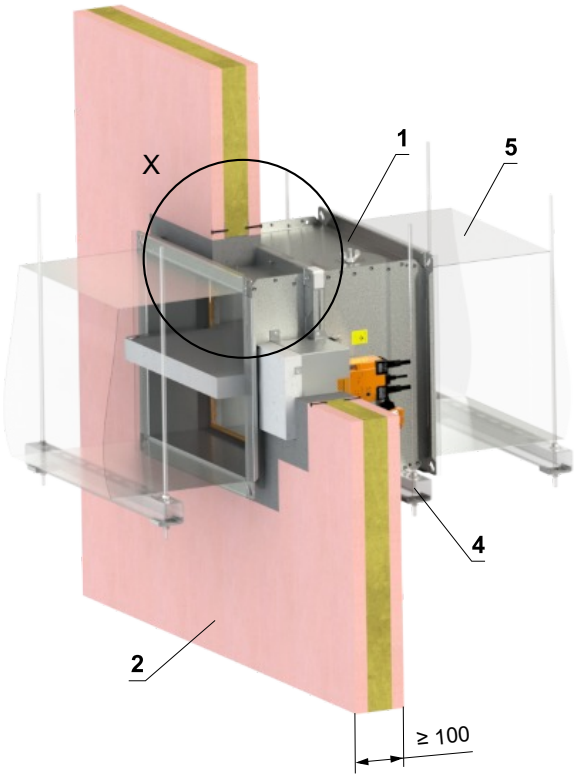

W = min. 50 mm
W = max. 150 mm

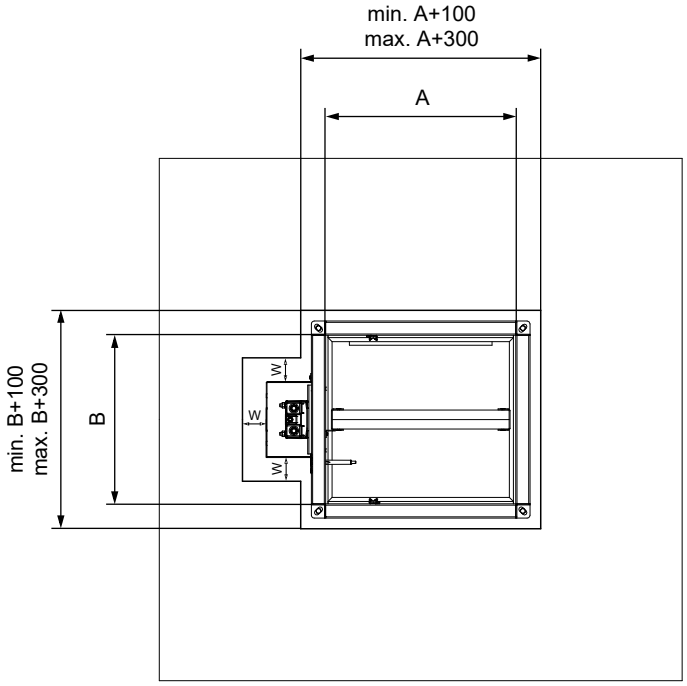

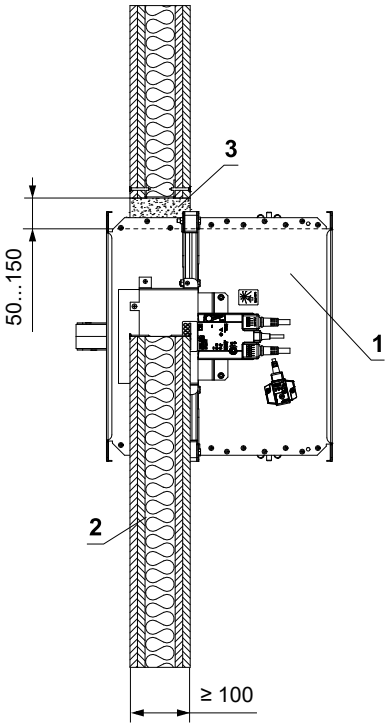

1 FDMA
2 Gypsum wall construction
3 Mortar or gypsum
4 Profile with threaded rod → see pages 41 to 43
5 Duct

In gypsum wall construction min. EI 90 - Ablative Coated Batt

EI 90 (v_e i↔o) S

- Standard flexible wall construction min. EI 90 according to EN 1363-1.
- For connection of following duct → see page 44
- The installation opening is lined with a UW/CW profile.

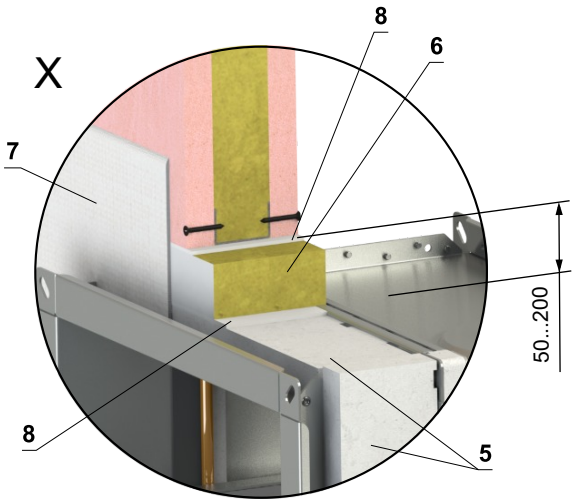

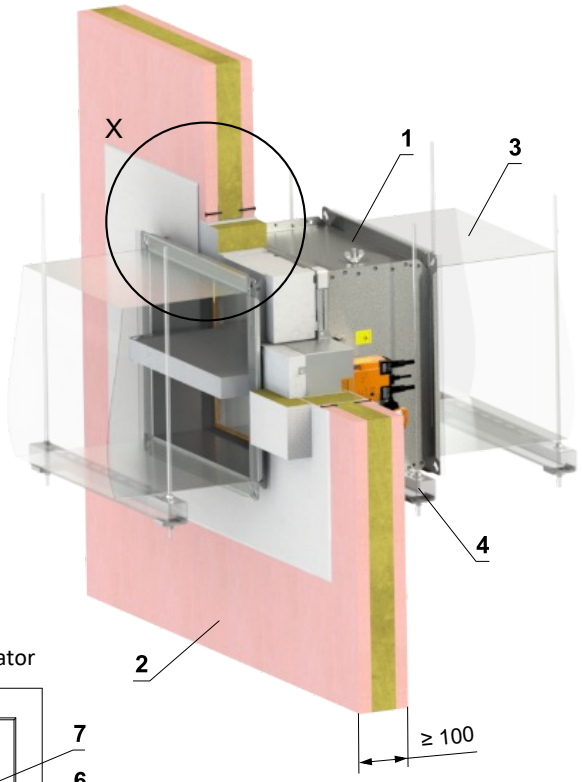

Isolation cover of actuator

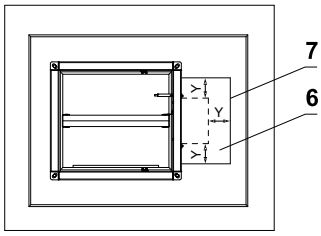

W = min. 50 mm
W = max. 200 mm
Y = min. 100 mm

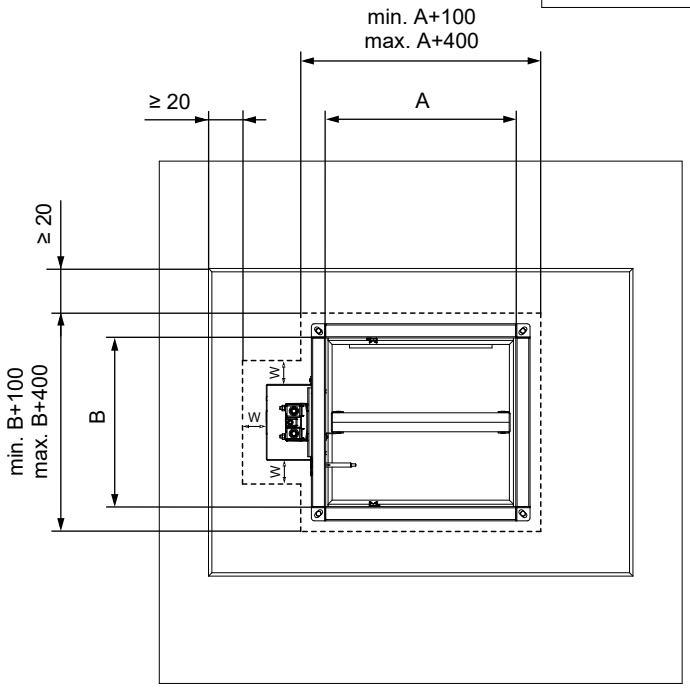

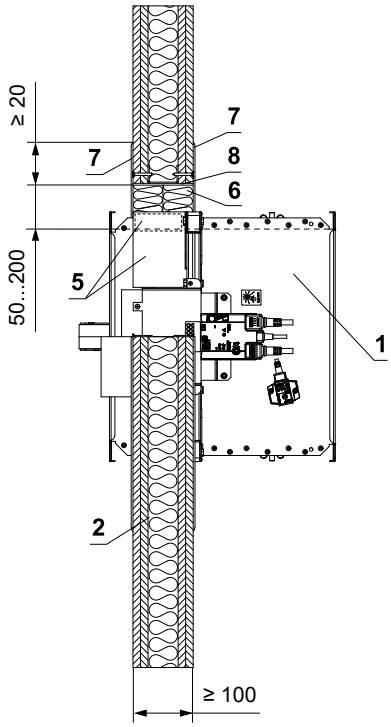

1 FDMA
2 Gypsum wall construction
3 Duct
4 Profile with threaded rod → see pages 41 to 43
5 Protective cladding board - min. th. 30 mm, min. density 750 kg/m³ (e.g. PROMATECT-MST) → see page 52
Ablative Coated Batt System HILTI*
6 Mineral wool board - min. density 140 kg/m³ (HILTI CFS-CT B 1S 140/50...)
7 Fire stop coating - th. 1 mm (HILTI CFS-CT...) - coating is overcoated on the support construction and on the damper casing/duct
8 Fire-resistant mastic - (HILTI CFS-S ACR...) fill the gap from both sides of the fire separation construction and around the perimeter of penetration and damper casing

* HILTI system can be replaced by a similar system with the same or higher thickness, density, fire reaction class, tested according to EN 1366-3.

In gypsum wall construction min. EI 90 - mineral wool with fire-resistant coating and fire-resistance boards **EI 90 (v_e i↔o) S**

- Standard flexible wall construction min. EI 90 according to EN 1363-1.
- For connection of following duct → see page 44
- The installation opening is lined with a UW/CW profile.

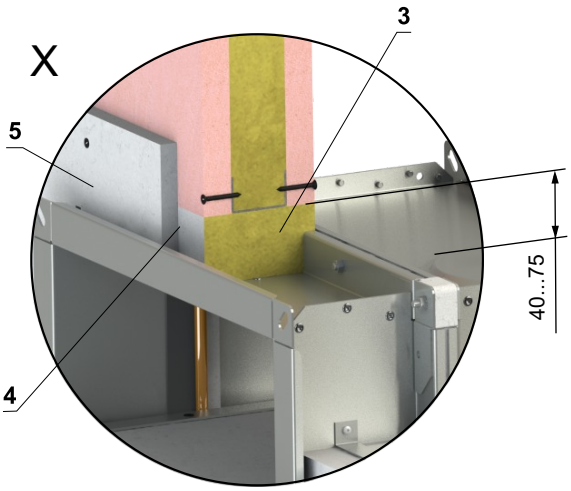

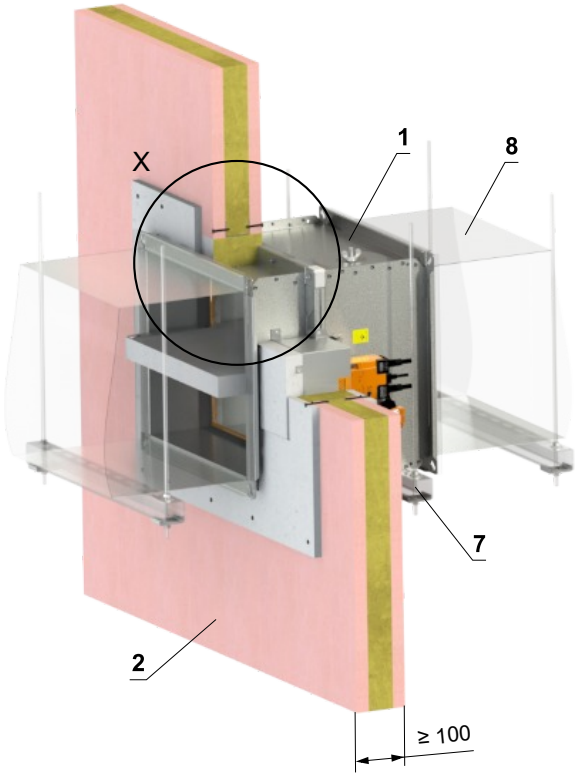

W = min. 40 mm
W = max. 75 mm

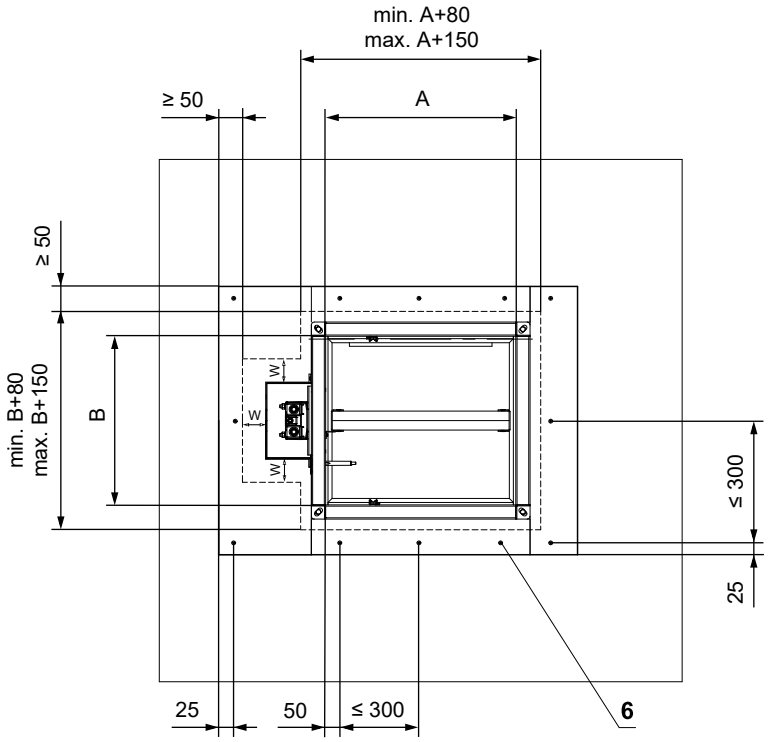

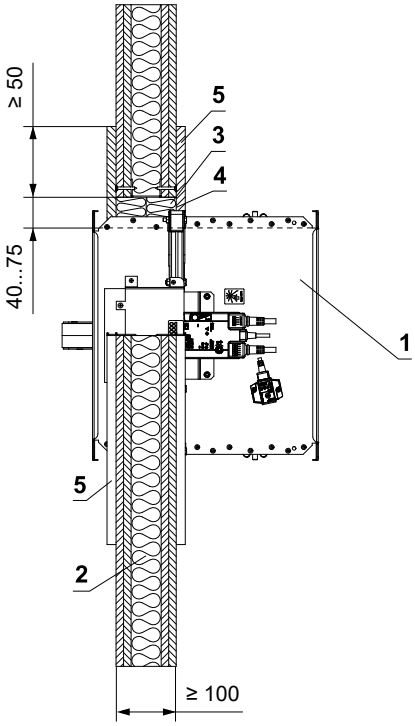

1 FDMA
2 Gypsum wall construction
3 Mineral wool board - min. density 140 kg/m³ (e.g. PROMAPYR-T150, ROCKWOOL HARDROCK / STEPROCK HD)
4 Fire-resistant coating - th. 1 mm (e.g. PROMASTOP-I)
5 Fire-resistant board - min. th. 15 mm, min. density 870 kg/m³ (e.g. PROMATECT-H)
6 Screw 4x50 mm - screws must be fixed in the wall construction, use steel anchors if necessary
7 Profile with threaded rod → see pages 41 to 43
8 Duct

Installation outside gypsum wall construction

Outside gypsum wall construction min. EI 90 - ISOVER Ultimate Protect - Ablative Coated Batt EI 60 (v_e i↔o) S

- Standard flexible wall construction min. EI 90 according to EN 1363-1.
- For connection of following duct → see page 44
- Minimum and maximum distance between the wall and fire damper is unlimited
- When installing the insulation, follow the ISOVER manufacturer's instructions
- The damper and the duct must be suspended separately
- The duct must be suspended on both sides of damper acc. to national rules
- Duct between fire damper and fire separating construction must be suspended by using threaded rods and mounting profiles, or another mounting system acc. to national standards
- Load of the suspension system depends on weight of the fire damper and duct system → see page 41
- Max. distance between two suspension systems is 1500 mm
- Duct at the point of penetration must be fixed to the fire separation structure
- Following air-conditioning duct must be suspended or supported so that all load transfer from the following duct to the fire damper is absolutely excluded. Adjacent duct must be suspended or supported, as required by the duct suppliers
- If the threaded rod is located inside the duct insulation, distance between threaded rod and duct is max 30 mm
- If the threaded rod is located outside the duct isolation, distance between threaded rod and isolation is max. 40 mm
- The installation opening is lined with a UW/CW profile.

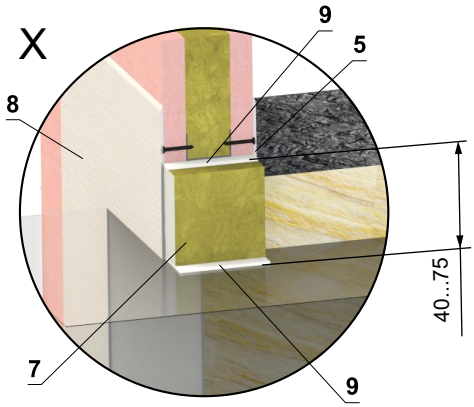

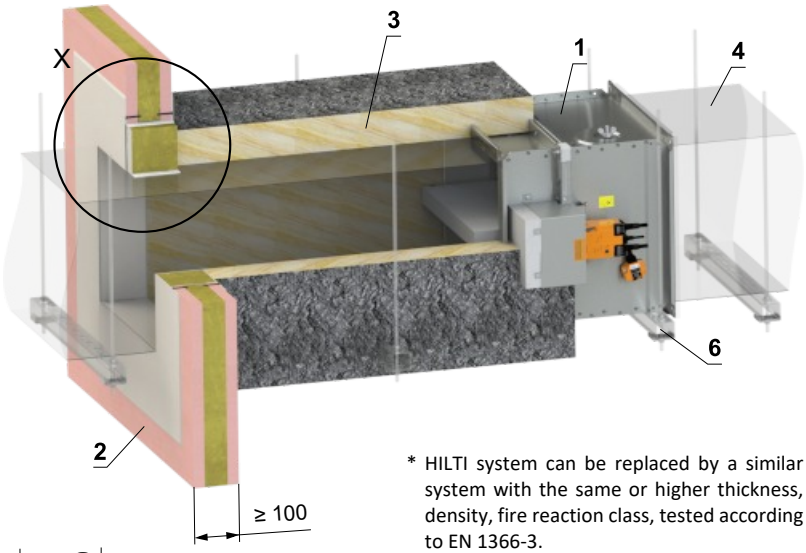

* HILTI system can be replaced by a similar system with the same or higher thickness, density, fire reaction class, tested according to EN 1366-3.

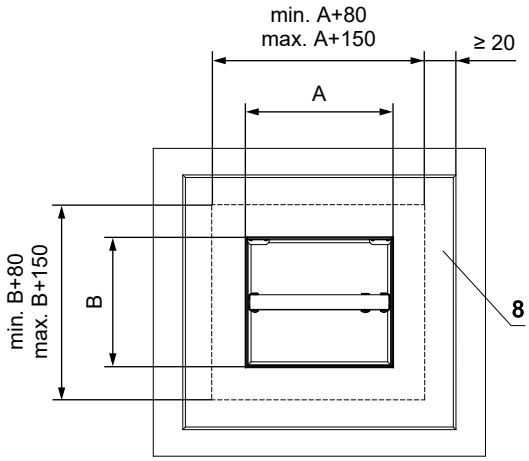

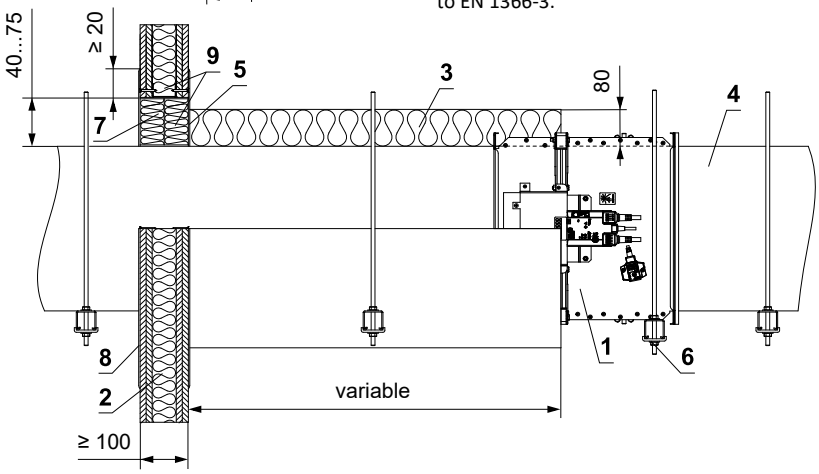

1 FDMA
2 Gypsum wall construction
3 Insulation board made of mineral wool, with a surface treatment of aluminum foil, min. thickness 80 mm, min. density 66 kg/m³ (System ISOVER Ultimate Protect Wired Mat 4.0 Alu1)
4 Standard air duct made of galvanized sheet metal, thickness according to damper size – the duct must be anchored on both sides of the fire-separating structure, e.g. using L-profiles 30 × 30 × 3 mm – according to the ISOVER manufacturer's instructions
5 ISOVER Protect BSK glue - apply on the insulation and fix it to the fire separation construction
6 Profile with threaded rod → see pages 41 to 43
Ablative Coated Batt System HILTI*
7 Mineral wool board - min. density 140 kg/m³ (HILTI CFS-CT B 1S 140/50...)
8 Fire stop coating - th. 1 mm (HILTI CFS-CT...) - coating is overcoated on the support construction and on the damper casing/duct
9 Fire-resistant mastic - (HILTI CFS-S ACR...) fill the gap from both sides of the fire separation construction and around the perimeter of penetration and damper casing

Outside gypsum wall construction min. EI 90 - mineral wool ROCKWOOL - mineral wool with fire-resistant coating and fire-resistant board

EI 90 (v_e i↔o) S

- Standard flexible wall construction min. EI 90 according to EN 1363-1.
- For connection of following duct → see page 44
- Minimum and maximum distance between the wall and fire damper is unlimited
- When installing the insulation, follow the ROCKWOOL manufacturer's instructions
- The damper and the duct must be suspended separately
- The duct must be suspended on both sides of damper acc. to national rules
- Duct between fire damper and fire separating construction must be suspended by using threaded rods and mounting profiles, or another mounting system acc. to national standards
- Load of the suspension system depends on weight of the fire damper and duct system → see page 41
- Max. distance between two suspension systems is 1500 mm
- Duct at the point of penetration must be fixed to the fire separation structure
- Following air-conditioning duct must be suspended or supported so that all load transfer from the following duct to the fire damper is absolutely excluded. Adjacent duct must be suspended or supported, as required by the duct suppliers
- If the threaded rod is located inside the duct insulation, distance between threaded rod and duct is max 30 mm
- If the threaded rod is located outside the duct isolation, distance between threaded rod and isolation is max. 40 mm
- For this installation VRM-Q reinforcement frame must be used → see page 51
- The installation opening is lined with a UW/CW profile.

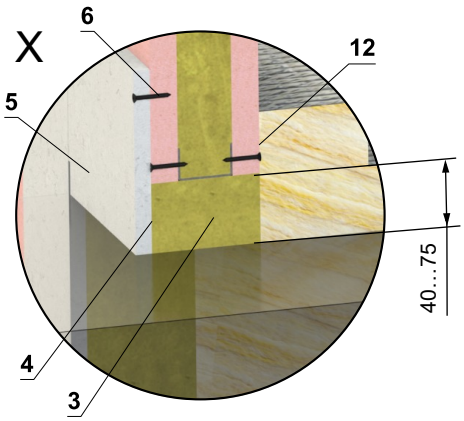

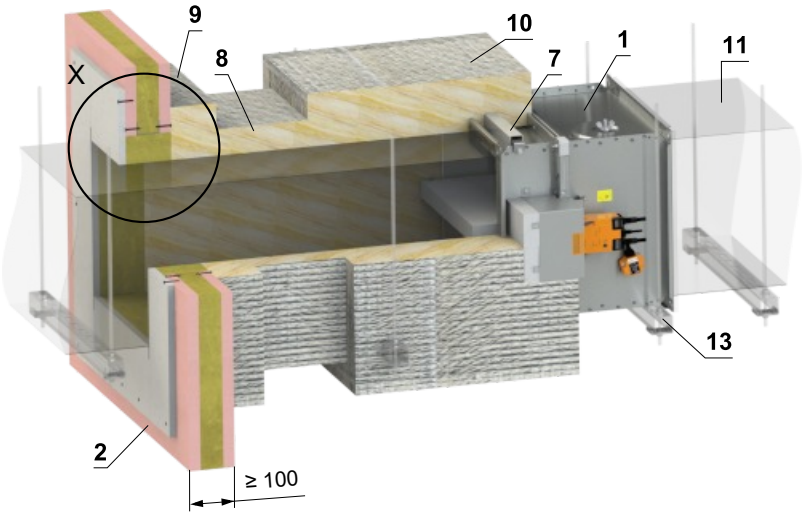

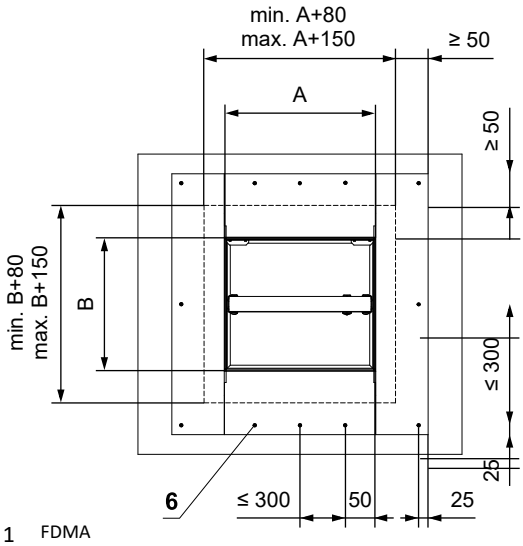

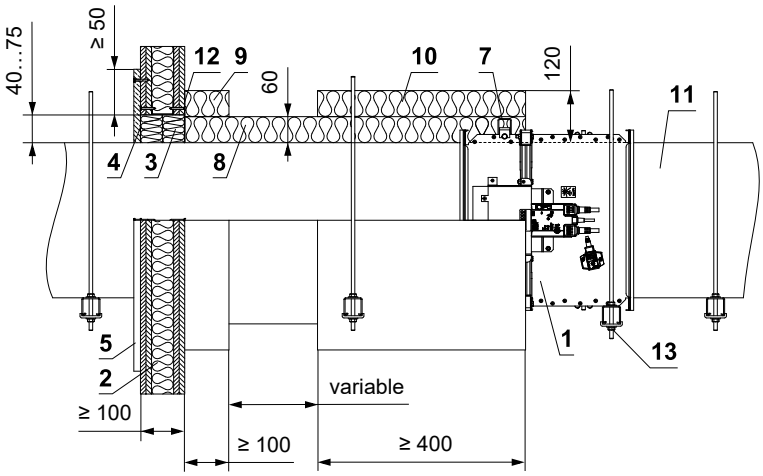

1 FDMA

2 Gypsum wall construction

3 Mineral wool board - min. density 140 kg/m³ (e.g. PROMAPYR-T150, ROCKWOOL HARDROCK / STEPROCK HD)

4 Fire-resistant coating - th. 1 mm (e.g. PROMASTOP-I)

5 Fire-resistant board - min. th. 15 mm, min. density 870 kg/m³ (e.g. PROMATECT-H)

6 Screw 4x50 mm - screws must be fixed in the wall construction, use steel anchors if necessary

7 VRM-Q → see page 51

8 Insulation board made of mineral wool, with a surface treatment of aluminum foil - th. 60 mm, min. density 300 kg/m³ - (System ROCKWOOL Conlit Ductrock 90)

9 Duct penetration insulation collar - th. 60 mm (System ROCKWOOL Conlit Ductrock 90) - glued (pos. 12) and fixed with screws to the wall construction

10 Insulation collar of the damper and duct connection - th. 60 mm (System ROCKWOOL Conlit Ductrock 90)

11 Standard air duct made of galvanized sheet metal, thickness according to damper size – the duct must be anchored on both sides of the fire-separating structure, e.g. using L-profiles 30 × 30 × 3 mm – according to the ISOVER manufacturer's instructions

12 ROCKWOOL Firepro glue - apply on the insulation and fix it to the fire separation construction

13 Profile with threaded rod → see pages 41 to 43

In solid ceiling construction

In solid ceiling construction - mortar or gypsum

EI 90 (h_o i↔o) S

- Standard low- and high-density rigid floor construction according to EN 1366-2
- For connection of following duct → see page 44
- The damper can be installed from both sides of the construction, i.e. from the top or the bottom side of the ceiling.

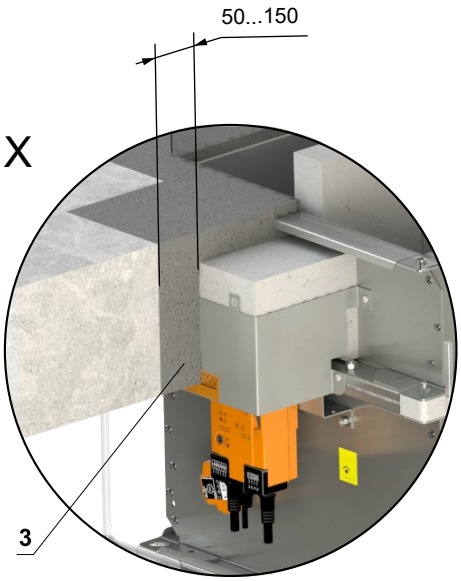

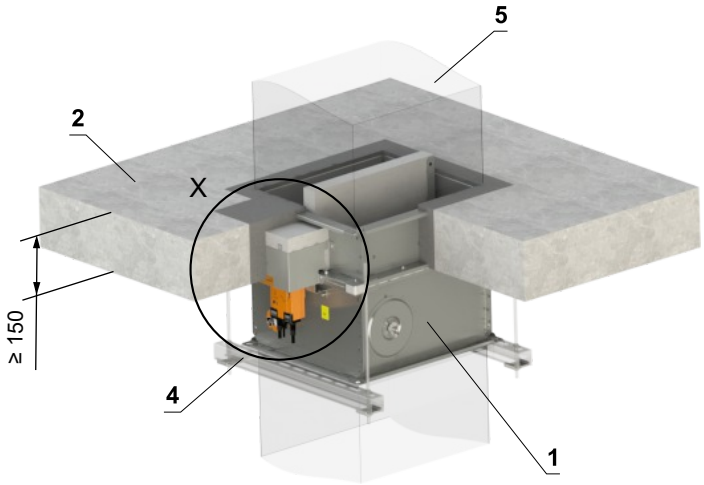

W = min. 50 mm
W = max. 150 mm

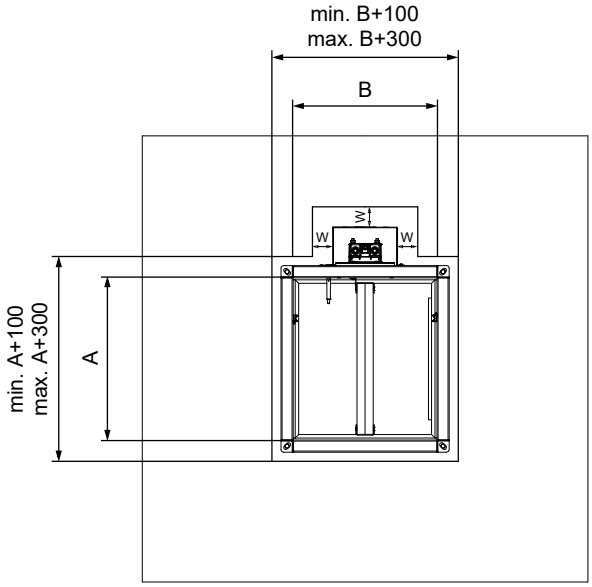

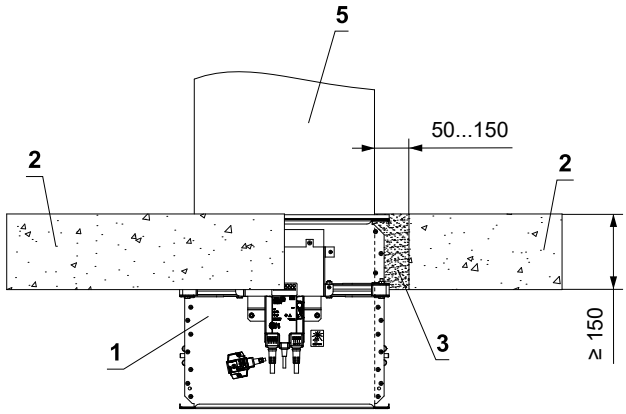

1 FDMA
2 Solid ceiling construction
3 Mortar or gypsum
4 Profile with threaded rod → see pages 41 to 43
5 Duct

In solid ceiling construction - Ablative Coated Batt

EI 90 (h_o i↔o) S

- Standard low- and high-density rigid floor construction according to EN 1366-2
- For connection of following duct → see page 44
- The damper can be installed from both sides of the construction, i.e. from the top or the bottom side of the ceiling.

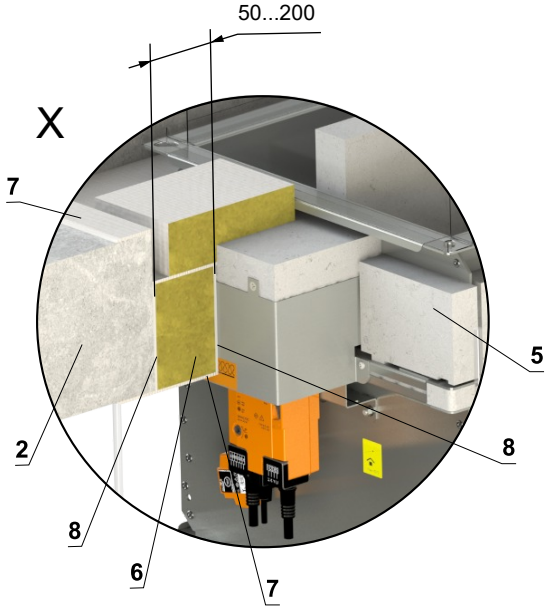

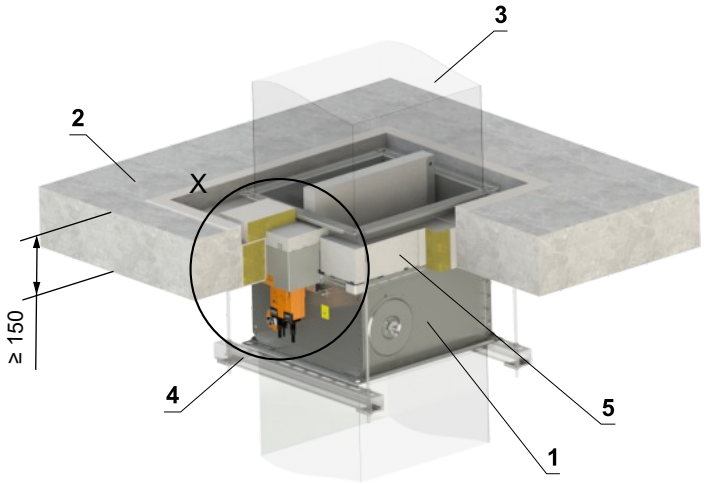

W = min. 50 mm
W = max. 200 mm
Y = min. 100 mm

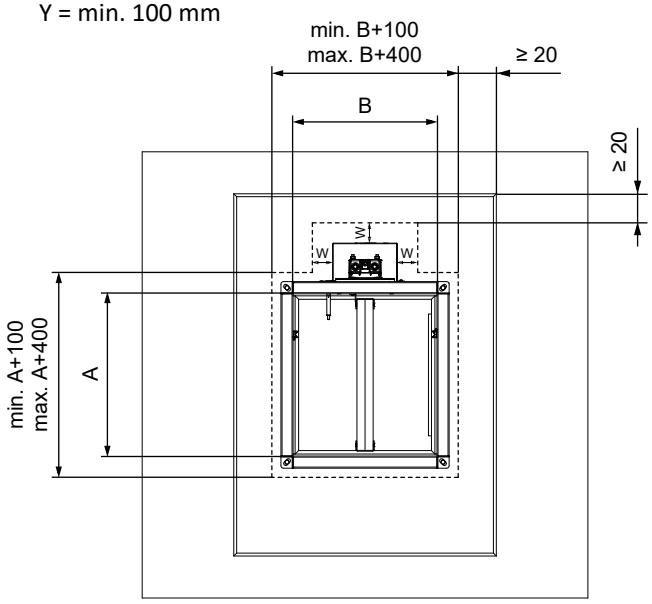

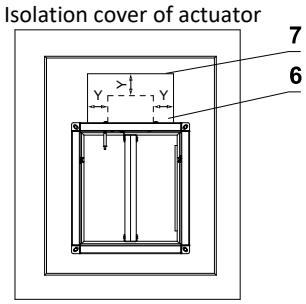

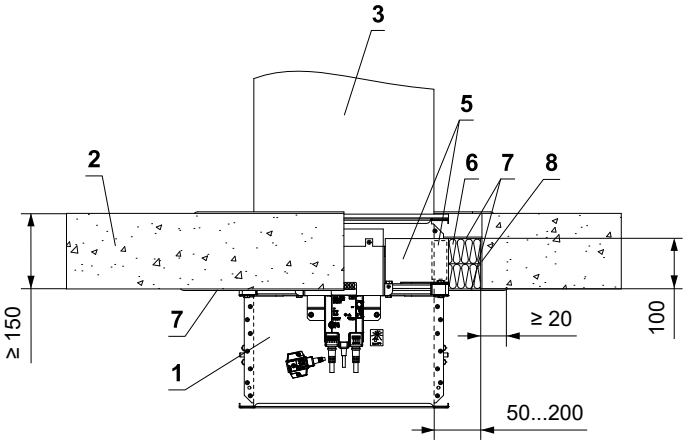

1 FDMA
2 Solid ceiling construction
3 Duct
4 Profile with threaded rod → see pages 41 to 43
5 Protective cladding board - min. th. 30 mm, min. density 750 kg/m³ (e.g. PROMATECT-MST) → see page 52
Ablative Coated Batt System HILTI*
6 Mineral wool board - min. density 140 kg/m³ (HILTI CFS-CT B 1S 140/50...)
7 Fire stop coating - th. 1 mm (HILTI CFS-CT...) - coating is overcoated on the support construction and on the damper casing/duct
8 Fire-resistant mastic - (HILTI CFS-S ACR...) fill the gap from both sides of the fire separation construction and around the perimeter of penetration and damper casing

* HILTI system can be replaced by a similar system with the same or higher thickness, density, fire reaction class, tested according to EN 1366-3.

In solid ceiling construction - mineral wool with fire-resistant coating and fire-resistance boards **EI 90 (h_o i↔o) S**

- Standard low- and high-density rigid floor construction according to EN 1366-2
- For connection of following duct → see page 44
- The damper can be installed from both sides of the construction, i.e. from the top or the bottom side of the ceiling.

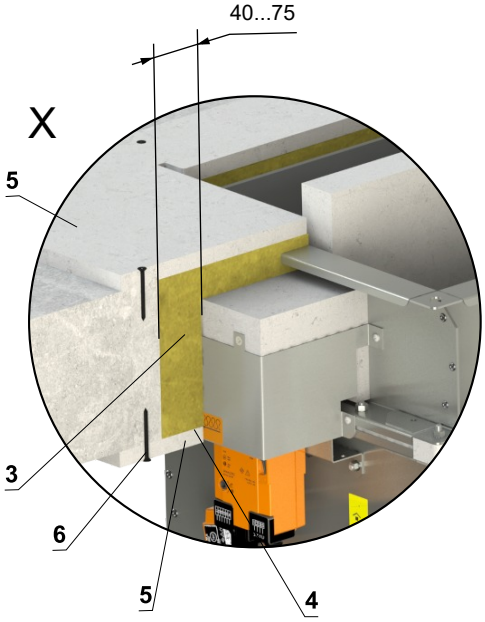

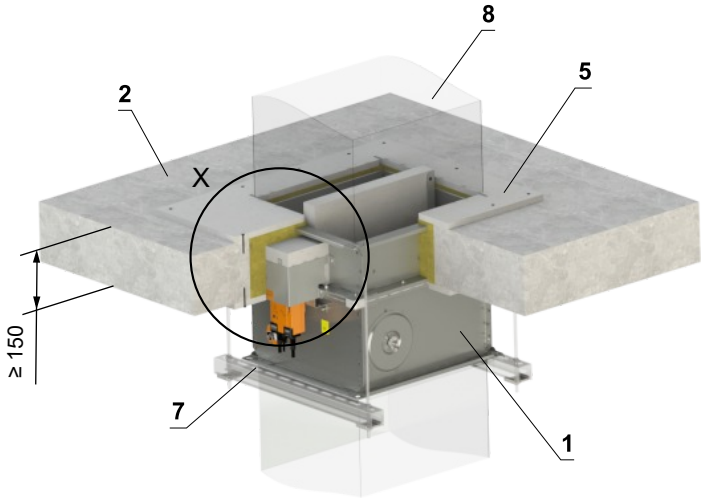

W = min. 40 mm
W = max. 75 mm

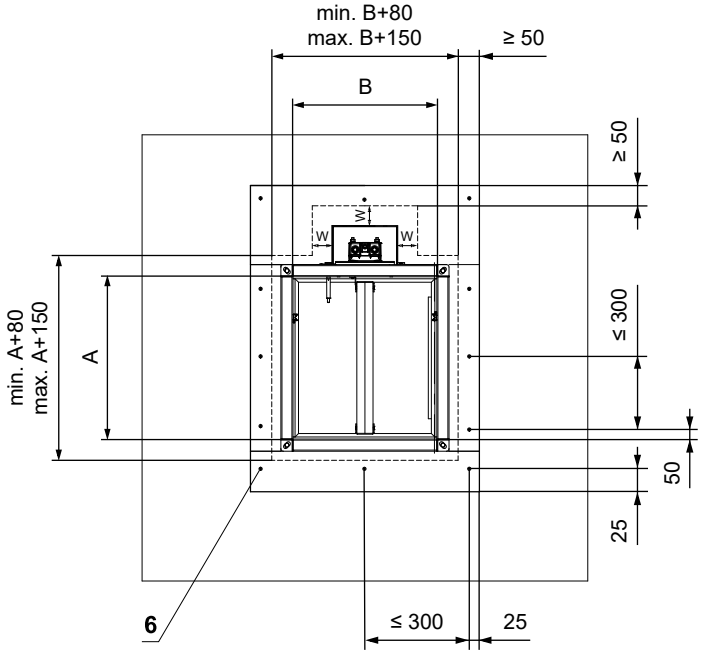

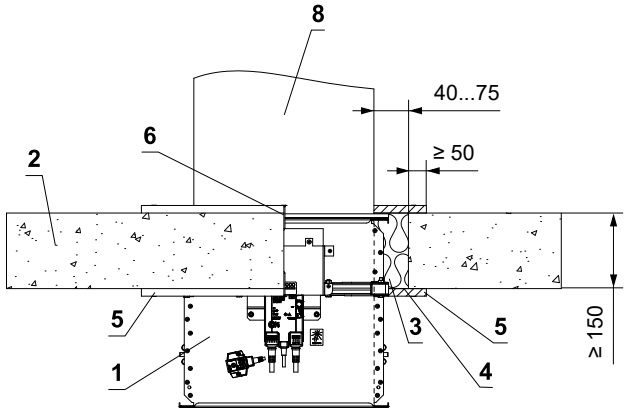

1 FDMA
2 Solid ceiling construction
3 Mineral wool board - min. density 140 kg/m³ (e.g. PROMAPYR-T150, ROCKWOOL HARDROCK / STEPROCK HD)
4 Fire-resistant coating - th. 1 mm (e.g. PROMASTOP-I)
5 Fire-resistant board - min. th. 15 mm, min. density 870 kg/m³ (e.g. PROMATECT-H)
6 Screw 4x50 mm - screws must be fixed in the wall construction, use steel anchors if necessary
7 Profile with threaded rod → see pages 41 to 43
8 Duct

Outside solid ceiling construction

Outside solid wall construction - mineral wool ROCKWOOL - mortar or gypsum

EI 90 (h_o i↔o) S

- Standard low- and high-density rigid floor construction according to EN 1366-2
- For connection of following duct → see page 44
- Minimum and maximum distance between the ceiling and fire damper is unlimited
- When installing the insulation, follow the ROCKWOOL manufacturer's instructions
- The damper and the duct must be suspended separately
- The duct must be suspended on both sides of damper acc. to national rules
- Duct between fire damper and fire separating construction must be suspended by using threaded rods and mounting profiles, or another mounting system acc. to national standards
- Load of the suspension system depends on weight of the fire damper and duct system → see page 41
- Max. distance between two suspension systems is 1500 mm
- Duct at the point of penetration must be fixed to the fire separation structure
- Following air-conditioning duct must be suspended or supported so that all load transfer from the following duct to the fire damper is absolutely excluded. Adjacent duct must be suspended or supported, as required by the duct suppliers
- If the threaded rod is located inside the duct insulation, distance between threaded rod and duct is max 30 mm
- If the threaded rod is located outside the duct isolation, distance between threaded rod and isolation is max. 40 mm
- For this installation VRM-Q reinforcement frame must be used → see page 51
- The damper can be installed from both sides of the construction, i.e. from the top or the bottom side of the ceiling.

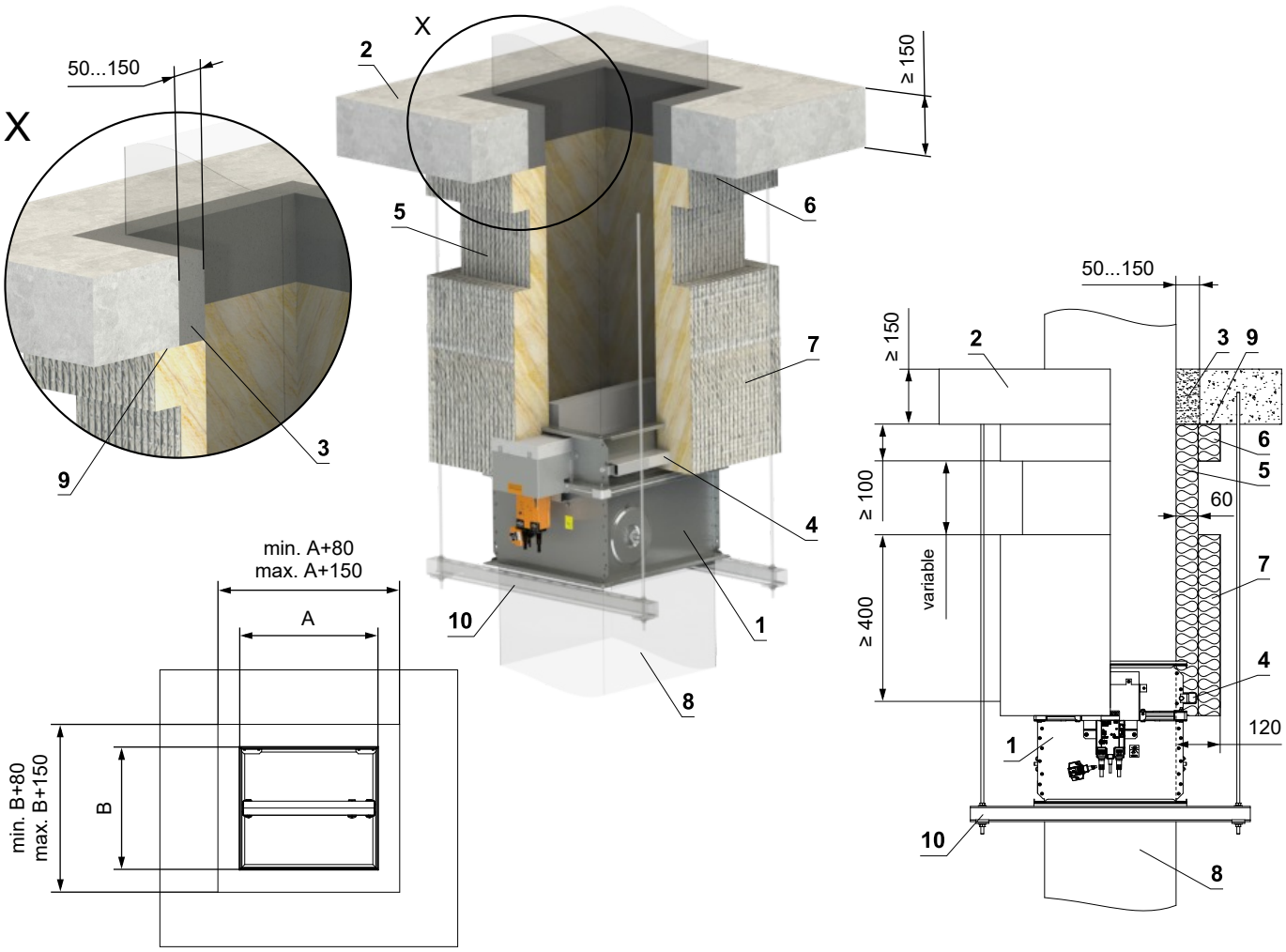

1 FDMA
2 Solid ceiling construction
3 Mortar or gypsum
4 VRM-Q → see page 51
5 Insulation board made of mineral wool, with a surface treatment of aluminum foil - th. 60 mm, min. density 300 kg/m³ - (System ROCKWOOL Conlit Ductrock 90)
6 Duct penetration insulation collar - th. 60 mm (System ROCKWOOL Conlit Ductrock 90) - glued (pos. 9) and fixed with screws to the wall construction
7 Insulation collar of the damper and duct connection - th. 60 mm (System ROCKWOOL Conlit Ductrock 90)
8 Standard air duct made of galvanized sheet metal, thickness according to damper size – the duct must be anchored on both sides of the fire-separating structure, e.g. using L-profiles 30 × 30 × 3 mm – according to the ISOVER manufacturer's instructions
9 ROCKWOOL Firepro glue - apply on the insulation and fix it to the fire separation construction
10 Profile with threaded rod → see pages 41 to 43

V. SUSPENSION SYSTEMS

Mounting to the ceiling wall

- The dampers must be suspended using threaded rods and mounting profiles. Their dimensioning depend on the weight of the damper.
- The dampers and the duct must be suspended separately.
- Following air-conditioning duct must be suspended or supported so that all load transfer from the following duct to the damper flanges is absolutely excluded. Adjacent duct must be suspended or supported, as required by the duct suppliers.

Examples of anchoring to the ceiling construction
Follow the instructions of fixing specialist or installation company

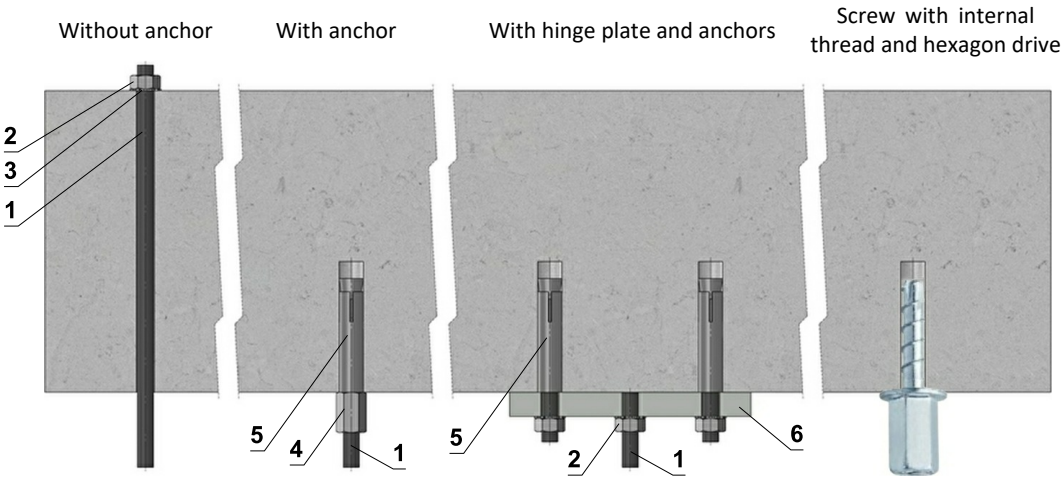

Hinge plates

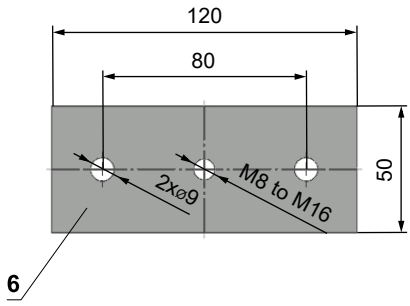

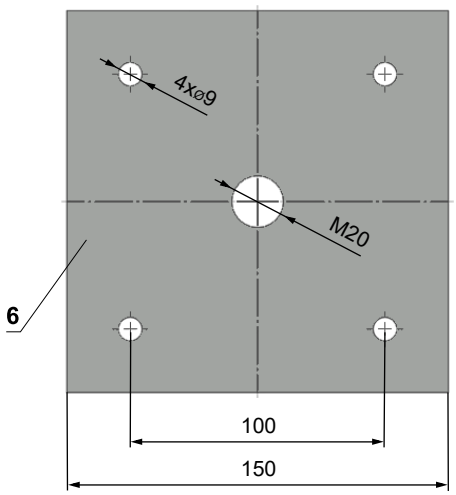

- If in doubt, always consult an anchor specialist engineer such as Halfen or Hilti.

1 Threaded rod M8 - M20
2 Nut M8 - M20
3 Washer for M8 - M20
4 Coupling Nut M8 - M20
5 Anchor
6 Hinge plate - min. thickness 10 mm
7 Concrete screw tested for fire resistance R30-R90, max. Tension up to 0.75 KN (length 35 mm)

Load capacities of threaded rods at the required fire resistance 60 min. < t ≤ 120 min.

Size	As [mm²]	Weight [kg]	
		for 1 rod	for 2 rods
M8	36,6	22	44
M10	58	35	70
M12	84,3	52	104
M16	157	96	192
M18	192	117	234
M20	245	150	300

Example of placing of mounting profiles HILTI

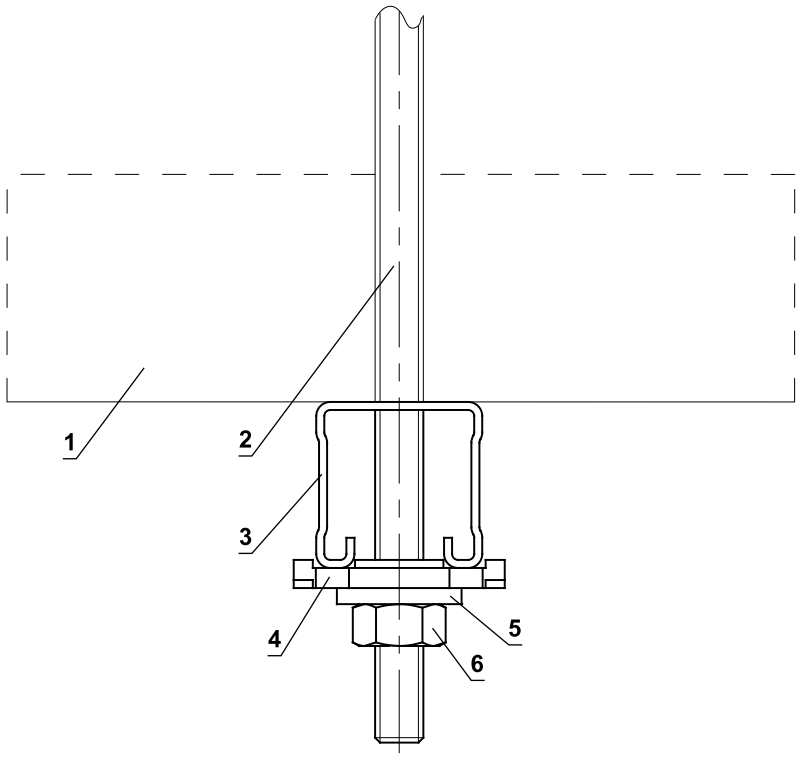

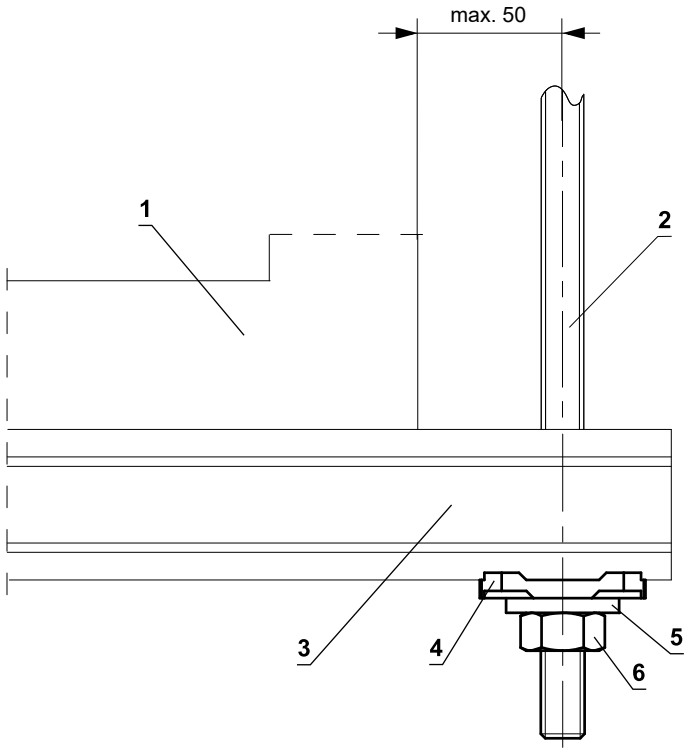

1 FDMA
2 Threaded rod M8 - M12
3 Support HILTI MQ-41 or MQ-41/3
4 Bored plate HILTI MQZ-L
5 Washer for M8 - M12
6 Nut M8 - M12

Example of fixing FDMA to the wall ceiling

In solid wall construction

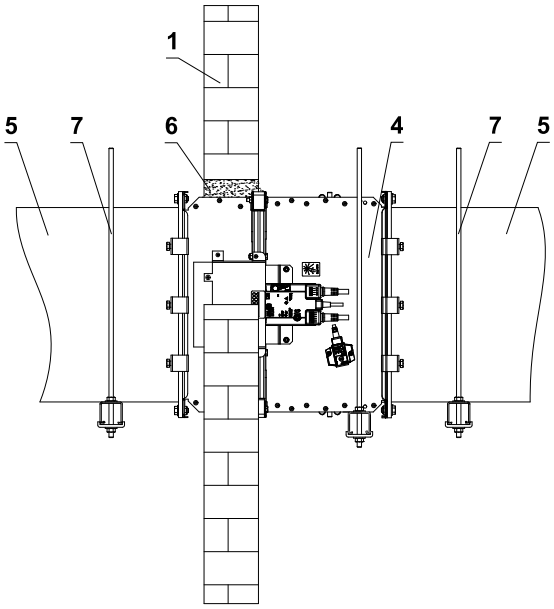

In gypsum wall construction

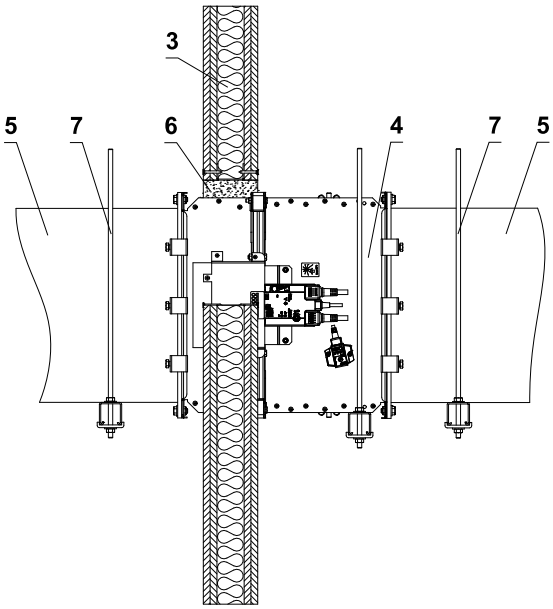

In solid ceiling construction

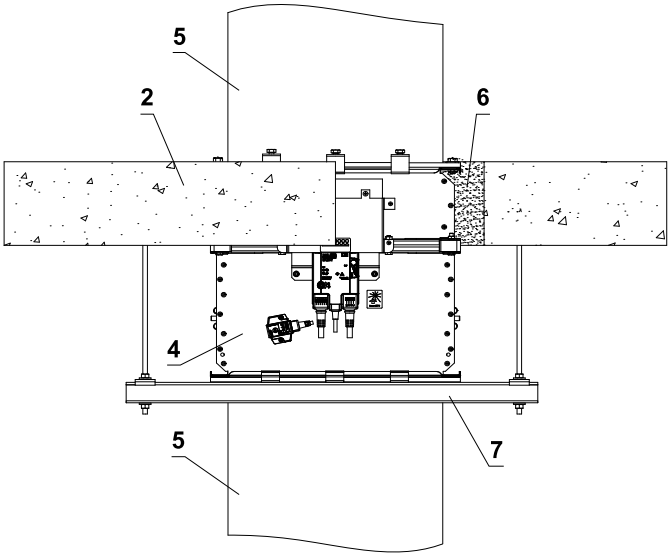

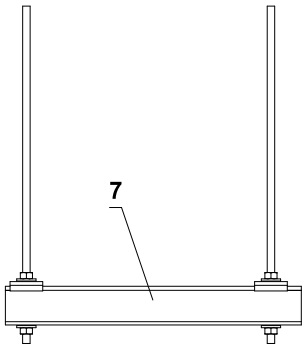

1 Solid wall construction
2 Solid ceiling construction
3 Gypsum wall construction
4 FDMA
5 Duct
6 Penetration
7 Profile with threaded rod → see page 42

- The method of attachment must follow the minimum requirements for attachment and connection of ductwork in accordance with national regulations. Also, the elements can be suspended from the top, or supported from bottom, or fastened from the side.

Example of duct connection

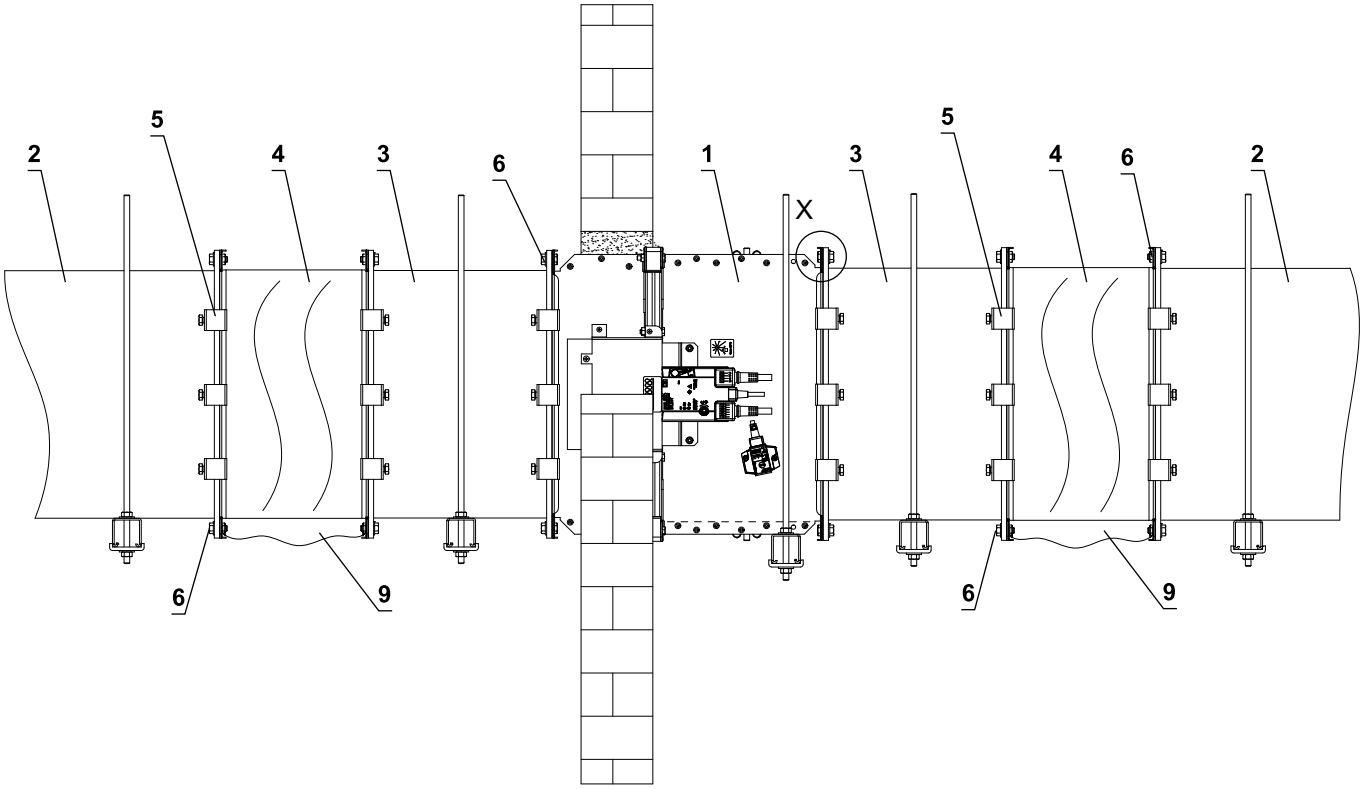

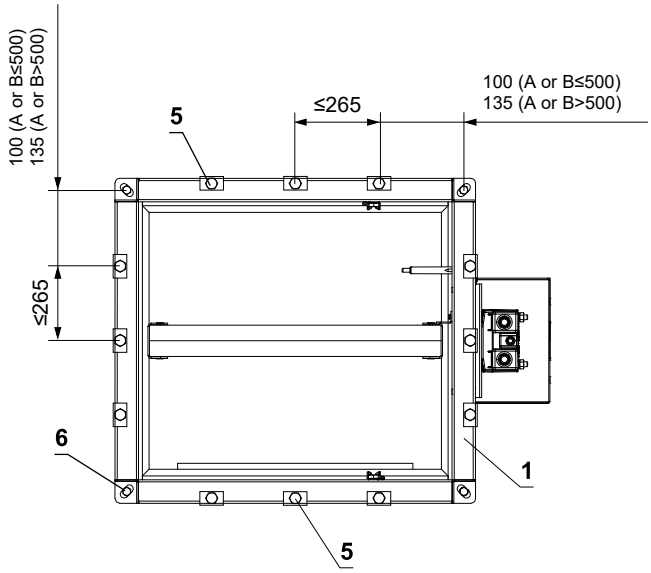

Electrically conductive connection

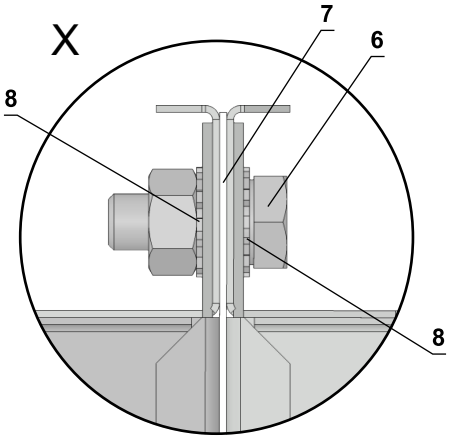

* at least one connection must be electrically conductive

1 FDMA
2 Duct
3 Extension piece (if required)
4 Damping pad
5 Steel clamp min. screw M8
6 Screw assembly M8 (screw M8x20 mm, 2 pcs toothed lock washer M8, nut M8) *
7 Sealing
8 Toothed lock washer M8
9 Protective bonding conductor

VI. TECHNICAL DATA

Pressure loss

Pressure loss calculation

$$\Delta p = \xi \cdot \rho \cdot \frac{w^2}{2}$$

Δp	[Pa]	pressure loss
w	[m/s]	air flow speed in nominal damper section
ρ	[kg/m³]	air density
ξ	[-]	coefficient of local pressure loss for the nominal damper section → see page 46

Determination of pressure loss by using diagram ρ = 1,2 kg/m³

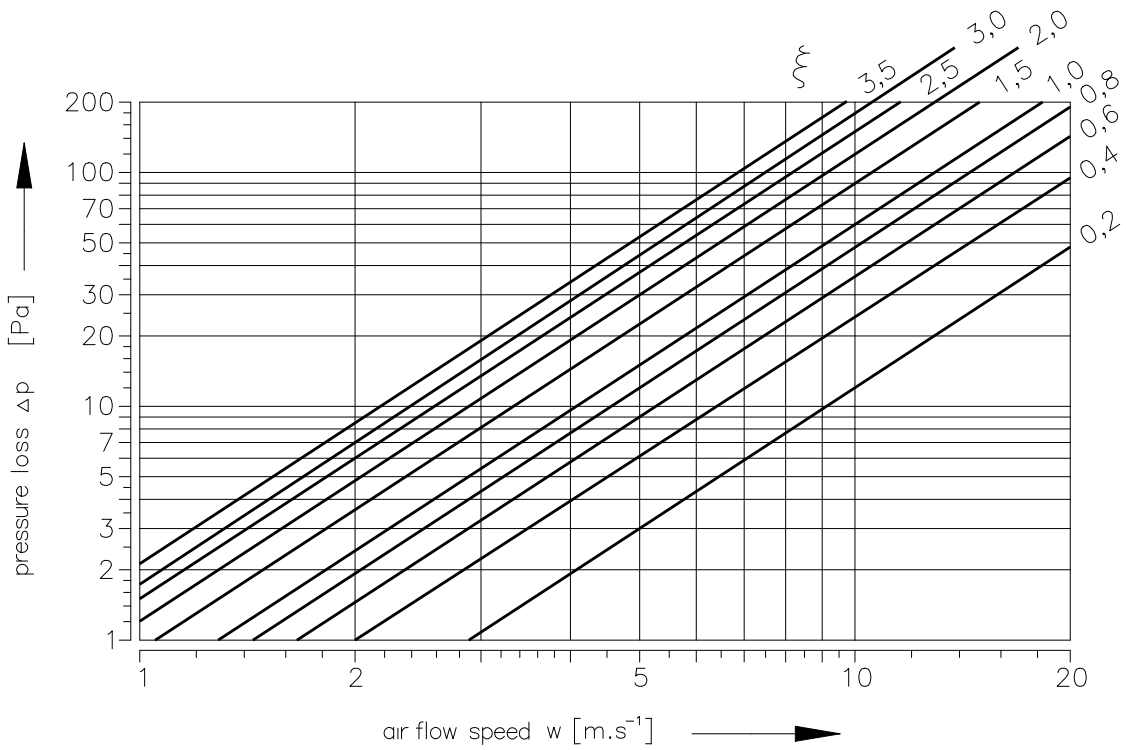

Coefficient of local pressure loss

	B										
A	**180**	**200**	**225**	**250**	**280**	**300**	**315**	**355**	**400**	**450**	**500**
180	1,849	1,476	1,210	0,983	0,888	0,823	0,703	0,608	0,535	0,478	0,437
200	1,737	1,385	1,095	0,921	0,862	0,782	0,658	0,569	0,500	0,446	0,407
225	1,678	1,333	0,995	0,887	0,832	0,754	0,638	0,545	0,479	0,430	0,393
250	1,613	1,286	0,978	0,859	0,805	0,722	0,613	0,524	0,462	0,414	0,381
280	1,538	1,218	0,954	0,814	0,768	0,682	0,583	0,499	0,438	0,395	0,358
300	1,482	1,178	0,926	0,772	0,722	0,642	0,549	0,475	0,422	0,372	0,342
315	1,415	1,124	0,894	0,743	0,682	0,598	0,528	0,456	0,400	0,356	0,325
355	1,359	1,079	0,852	0,713	0,635	0,573	0,506	0,436	0,383	0,341	0,311
400	1,312	1,041	0,811	0,687	0,618	0,562	0,487	0,420	0,368	0,328	0,299
450	1,271	1,009	0,798	0,665	0,602	0,533	0,471	0,406	0,356	0,317	0,289
500	1,240	0,983	0,773	0,648	0,592	0,526	0,459	0,395	0,346	0,308	0,281
550	1,225	0,971	0,752	0,638	0,586	0,522	0,451	0,389	0,341	0,306	0,278
560	1,211	0,960	0,744	0,632	0,572	0,519	0,447	0,385	0,337	0,300	0,274
600	1,198	0,945	0,738	0,626	0,568	0,507	0,441	0,381	0,334	0,297	0,270
630	1,184	0,938	0,728	0,617	0,565	0,493	0,437	0,376	0,329	0,293	0,267
650	1,173	0,928	0,711	0,610	0,544	0,490	0,431	0,371	0,324	0,289	0,266
700	1,165	0,922	0,705	0,609	0,539	0,489	0,429	0,369	0,323	0,288	0,263
710	1,160	0,919	0,697	0,604	0,535	0,488	0,427	0,368	0,322	0,287	0,261
750	1,150	0,911	0,691	0,600	0,530	0,482	0,422	0,363	0,318	0,284	0,258
800	1,140	0,903	0,686	0,593	0,523	0,475	0,419	0,361	0,316	0,281	0,256
900	1,122	0,888	0,674	0,583	0,517	0,467	0,412	0,355	0,310	0,276	0,252
1000	1,108	0,877	0,666	0,576	0,509	0,453	0,407	0,350	0,306	0,273	0,248
1100	1,095	0,867	0,657	0,569	0,498	0,443	0,402	0,345	0,302	0,269	0,245
1250	1,084	0,857	0,643	0,562	0,486	0,438	0,397	0,342	0,299	0,266	0,242
1400	1,073	0,849	0,632	0,557	0,478	0,436	0,393	0,338	0,296	0,263	0,240
1500	1,067	0,844	0,628	0,554	0,469	0,429	0,391	0,336	0,294	0,262	0,238
1600	1,062	0,840	0,610	0,551	0,450	0,420	0,389	0,334	0,293	0,260	0,237

	B										
A	**550**	**560**	**600**	**630**	**650**	**700**	**710**	**750**	**800**	**900**	**1000**
180	0,418	0,400	0,378	0,369	0,352	0,349	0,343	0,331	0,322	0,304	0,291
200	0,389	0,373	0,356	0,344	0,332	0,325	0,320	0,309	0,300	0,284	0,271
225	0,375	0,361	0,342	0,333	0,319	0,313	0,309	0,302	0,292	0,272	0,262
250	0,362	0,345	0,331	0,321	0,308	0,302	0,297	0,291	0,281	0,263	0,253
280	0,342	0,325	0,312	0,302	0,291	0,288	0,283	0,271	0,267	0,249	0,241
300	0,321	0,312	0,296	0,287	0,279	0,273	0,269	0,256	0,251	0,236	0,228
315	0,305	0,297	0,282	0,274	0,267	0,259	0,254	0,246	0,238	0,225	0,215
355	0,296	0,284	0,271	0,262	0,251	0,248	0,243	0,234	0,228	0,215	0,205
400	0,281	0,273	0,265	0,252	0,243	0,237	0,234	0,226	0,219	0,207	0,197
450	0,271	0,264	0,255	0,243	0,237	0,231	0,226	0,219	0,211	0,199	0,190
500	0,269	0,257	0,244	0,236	0,228	0,223	0,219	0,212	0,205	0,194	0,185
550	0,262	0,254	0,239	0,225	0,217	0,211	0,208	0,209	0,202	0,191	0,182
560	0,259	0,250	0,231	0,230	0,221	0,210	0,208	0,206	0,200	0,189	0,180
600	0,256	0,248	0,229	0,228	0,218	0,209	0,207	0,202	0,197	0,186	0,178
630	0,253	0,244	0,228	0,225	0,215	0,209	0,207	0,199	0,195	0,184	0,176
650	0,248	0,242	0,226	0,222	0,213	0,208	0,206	0,197	0,193	0,182	0,174
700	0,244	0,241	0,225	0,221	0,212	0,207	0,205	0,196	0,192	0,181	0,173
710	0,242	0,239	0,224	0,220	0,211	0,205	0,204	0,195	0,191	0,180	0,172
750	0,240	0,236	0,220	0,218	0,209	0,203	0,202	0,194	0,189	0,178	0,170
800	0,239	0,234	0,217	0,215	0,206	0,201	0,200	0,192	0,187	0,176	0,168
900	0,234	0,230	0,215	0,212	0,200	0,198	0,196	0,189	0,184	0,173	0,165
1000	0,231	0,227	0,211	0,209	0,198	0,195	0,193	0,185	0,181	0,171	0,163
1100	0,229	0,224	0,208	0,206	0,196	0,194	0,191	0,182	0,179	0,168	0,161
1250	0,224	0,221	0,205	0,203	0,192	0,191	0,189	0,180	0,176	0,166	0,159
1400	0,221	0,219	0,203	0,201	0,189	0,188	0,187	0,178	0,175	0,165	0,157
1500	0,220	0,218	0,201	0,200	0,187	0,186	0,185	0,176	0,174	0,164	0,156
1600	0,220	0,216	0,200	0,199	0,187	0,186	0,185	0,175	0,173	0,163	0,155

Noise data

Level of acoustic output corrected with filter A

$$L_{WA} = L_{W1} + 10 \log(S) + K_A$$

L_{WA}	[dB(A)]	level of acoustic output corrected with filter A
L_{W1}	[dB]	level of acoustic output L_{W1} related to the 1 m^2 section
S	[m^2]	duct cross section
K_A	[dB]	correction to the weight filter A

Level of acoustic output in octave ranges

$$L_{Woct} = L_{W1} + 10 \log(S) + L_{rel}$$

L_{Woct}	[dB]	spectrum of acoustic output in octave range
L_{W1}	[dB]	level of acoustic output L_{W1} related to the 1 m^2 section
S	[m^2]	duct cross section
L_{rel}	[dB]	relative level expressing the shape of the spectrum

Tables of acoustitc values

Level of acoustic output L_{W1}[dB] related to the 1 m^2 section

	ξ [-]											
w [m/s]	**0,2**	**0,3**	**0,4**	**0,5**	**0,6**	**0,7**	**0,8**	**0,9**	**1**	**1,5**	**2**	**2,5**
2	15,5	18,7	20,9	22,6	24	25,2	26,3	27,2	28	31,2	33,4	35,1
3	26,1	29,2	31,5	33,2	34,6	35,8	36,9	37,8	38,6	41,7	44	45,7
4	33,6	36,7	39	40,7	42,1	43,3	44,3	45,3	46,1	49,2	51,5	53,2
5	39,4	42,5	44,8	46,5	47,9	49,1	50,2	51,1	51,9	55	57,3	59
6	44,1	47,3	49,5	51,3	52,7	53,9	54,9	55,8	56,6	59,8	62	63,8
7	48,2	51,3	53,5	55,3	56,7	57,9	58,9	59,8	60,7	63,8	66,1	67,8
8	51,6	54,8	57	58,8	60,2	61,4	62,4	63,3	64,1	67,3	69,5	71,3
9	54,7	57,9	60,1	61,8	63,2	64,4	65,5	66,4	67,2	70,4	72,6	74,3
10	57,4	60,6	62,8	64,6	66	67,2	68,2	69,1	70	73,1	75,3	77,1
11	59,9	63,1	65,3	67,1	68,5	69,7	70,7	71,6	72,4	75,6	77,8	79,6
12	62,2	65,4	67,6	69,3	70,7	71,9	73	73,9	74,7	77,9	80,1	81,8

Correction to the weight filter A

w [m/s]	**2**	**3**	**4**	**5**	**6**	**7**	**8**	**9**	**10**	**11**	**12**
K_A [dB]	-15	-11,8	-9,8	-8,4	-7,3	-6,4	-5,7	-5	-4,5	-4	-3,6

Relative level expressing the shape of the spectrum L_{rel}

	f [Hz]							
w [m/s]	**63**	**125**	**250**	**500**	**1000**	**2000**	**4000**	**8000**
2	-4,5	-6,9	-10,9	-16,7	-24,1	-33,2	-43,9	-56,4
3	-3,9	-5,3	-8,4	-13,1	-19,5	-27,6	-37,4	-48,9
4	-3,9	-4,5	-6,9	-10,9	-16,7	-24,1	-33,2	-43,9
5	-4	-4,1	-5,9	-9,4	-14,6	-21,5	-30,0	-40,3
6	-4,2	-3,9	-5,3	-8,4	-13,1	-19,5	-27,6	-37,4
7	-4,5	-3,9	-4,9	-7,5	-11,9	-17,9	-25,7	-35,1
8	-4,9	-3,9	-4,5	-6,9	-10,9	-16,7	-24,1	-33,2
9	-5,2	-3,9	-4,3	-6,4	-10,1	-15,6	-22,7	-31,5
10	-5,5	-4	-4,1	-5,9	-9,4	-14,6	-21,5	-30
11	-5,9	-4,1	-4	-5,6	-8,9	-13,8	-20,4	-28,8
12	-6,2	-4,3	-3,9	-5,3	-8,4	-13,1	-19,5	-27,6

VII. MATERIAL, FINISHING

- Damper casings are made from galvanized sheet metal without further surface treatment.
- Damper blades are made from fire resistant asbestos free boards made of mineral fibres.
- Thermal fuses are made of sheet brass, thickness 0,5 mm.
- Fasteners are galvanized.
- According to the customer's requirements, dampers can be made of stainless steel material.

  Specifications for stainless-steel design:

  - Class A2 – Food-grade stainless steel (AISI 304 – EN 1.4301)
  - Class A4 – Chemistry-grade stainless steel (AISI 316, 316L – EN 1.4401, EN 1.4404)

  The respective stainless steel is the material for all components that are located or entering the damper inner space; components outside the damper casing are typically from galvanised sheet metal (fasteners for mounting the actuator or manual control), frame components.

  The following components, including the fasteners, are made from stainless steel at all times:

  1) Damper casing and all components permanently attached
  2) Blade holders including pins, metal parts of blades
  3) Parts of a manual control entering the inner space of a damper casing
  4) Inspection opening cover including the stirrup and fasteners (if they are parts of the cover)

  The damper blade is made of asbestos-free, fire-resistant mineral fibre boards joined with U-shaped drive staples, sealed on the outer side with K84 adhesive.

  Thermal fuse is identical for all material variants of the dampers. Upon specification by customer, the thermal fuse can be made from A4 from stainless steel sheet metal.

  Thermoelectric activation device BAT is modified for stainless-steel variant of the dampers; standard galvanised screws are replaced with stainless-steel M4 screws of corresponding class. Damper casing has stainless-steel riveting M4 nuts.

  Plastic, rubber and silicon components, sealants, foaming tapes, glass-ceramic seals, housings, brass bearings of the blade, actuators, and end switches are identical for all material variants of the dampers.

  Some fasteners and components are only available in one class of stainless steel; the type will be used in all stainless-steel variants.

  The damper blade in the variant for chemical environments (Class A4) is always treated with a coating of chemically resistant Promat SR.

  Any other requirements for the design will be considered atypical and will be addressed on an individual basis.

VIII. TRANSPORTATION, STORAGE AND WARRANTY

Logistic terms

- Dampers are delivered on pallets. As standard, the dampers are wrapped in plastic foil for protection during transport and must not be used for long-term storage. Temperature changes during transport can cause condensation of water inside the packaging and thereby cause corrosion of materials used in the dampers (e.g. white corrosion on zinc-coated items or mould on calcium silicate). Therefore, it is necessary to remove the transport packaging immediately after unloading to allow air to circulate around the product.
- The dampers must be stored in clean, dry, well ventilated and dust-free environment out of direct sunlight. Ensure protection against moisture and extreme temperatures (minumum temperature +5°C). The dampers must be protected against mechanical and accidental damage prior to installation.
- Another required packaging system should be approved and agreed by manufacturer. Packaging material is not returnable in case that another packaging system (material) is required and used and it is not included into final price of damper.
- Dampers are transported by box freight vehicles without direct weather impact, there must not occur any shocks and ambient temperature must not exceed +50°C. Dampers must be protected against impact when transported and manipulated. During transportation, the damper blade must be in the "CLOSED" position.
- Dampers must be stored indoor in environment without any aggressive vapours, gases or dust. Indoor temperature must be in the range from -30°C to +50°C and maximum relative humidity 95%.

Warranty

- The manufacturer provides a warranty of 24 months from the date of dispatch for the dampers.
- The warranty for fire dampers FDMA, provided by the manufacturer, is completely void if actuating, closing and control devices are unprofessionally handled by untrained workers or if electric components, i.e. limit switches, actuators, communication and supply devices and thermoelectric activation devices are dismounted.
- The warranty is void if dampers are used for other purposes, devices and working conditions than those allowed by these technical conditions or if the dampers are mechanically damaged during handling.
- If the dampers are damaged by transport, a record must be written down with the forwarder at reception for later complaint.

IX. ASSEMBLY, ATTENDANCE AND MAINTENANCE

- Assembly, maintenance and damper function check can be done only by qualified and trained person, i.e. “AUTHORIZED PERSON” according to the manufacturer documentation. All works done on the fire dampers must be done according international and local norms and laws.
- All effective safety standards and directives must be observed during damper assembly.
- To ensure reliable damper function it is necessary to avoid blocking the actuating mechanism and contact surfaces with collected dust, fibre and sticky materials and solvents.
- Flange and screw joints must be conductively connected to protect against dangerous contact. 2 galvanized lock washers that are placed under the head of one screw and a fastened nut are used for conductive connection.

Manual operation - actuator control without electric voltage

- A special wrench (part of the actuator) can be used to manually turn the damper blade to any position. When the wrench is turned in the direction of the arrow, the damper blade rotates to its open position. As the blade rotation is stopped, in every position, the actuator will be locked. Unlocking is possible even manually as per instructions on the actuator, or by the activation of the supply voltage.
- If the actuator is manually locked, the damper blade will not close in the event of a fire after the activation of the thermoelectric activation device BAT. To restore correct damper operation, the actuator must be unlocked (manually or by applying power supply).

Limit switches

- If the damper is equipped with limit switches and these switches are not used during operation (e.g. because of a project change), they can be left on the damper and not connected (they need not be dismounted).
- On the other hand, if the limit switch is to be added to the damper design, the change can be implemented by change kit.
- These facts must be recorded in the respective operation documentation of the damper (record books of the damper, fire logs, etc.) and subsequently, adequate function checks must be carried out.

Installation / fixing the damper

- The damper casing shall not be deformed in the course of bricking in.
- Once the damper is built in, the damper blade shall not grind on the damper casing during opening or closing.

Protection of the damper casing against buckling during installation, especially for large sizes!

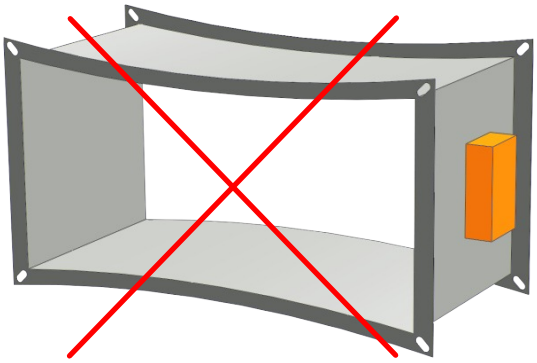

WRONG!

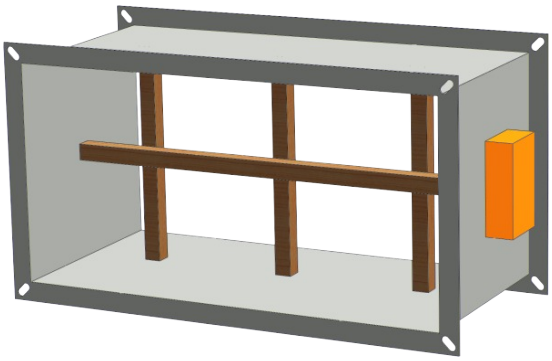

Reinforcement of the casing with wooden beams

Reinforcement frame VRM-Q

- If the damper is installed outside the fire separation construction, a damper side A ≥ 800 mm and fire resistance is EI 90 S, VRM-Q reinforcement frame must be used.
- For lower fire resistance than EI 90 S, VRM-Q reinforcement frame is not necessary!
- VRM-Q is mounted only on "A" sides

Fixing of reinforcing frame VRM-Q to the damper casing

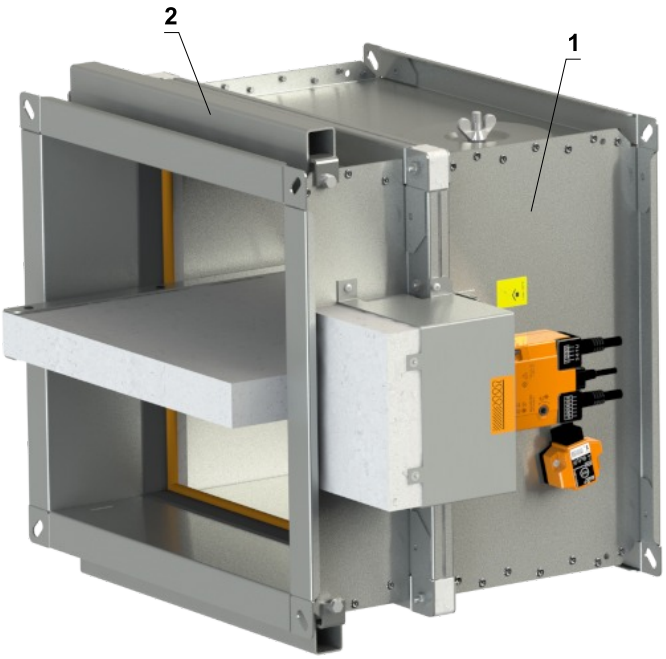

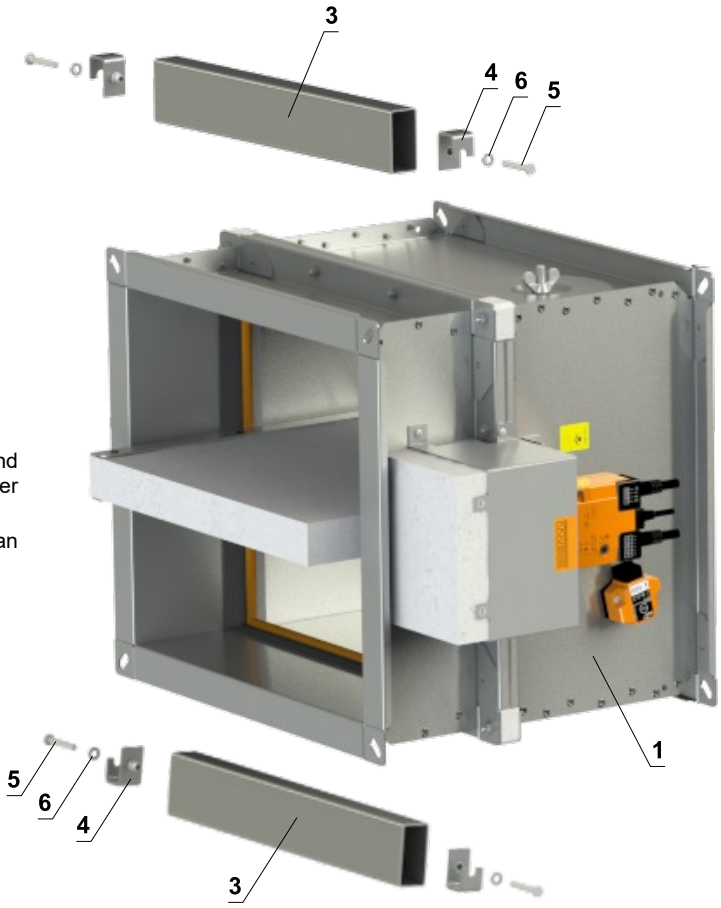

Installation procedure

1) Place part A on the damper casing
2) Insert part B to the part A
3) Adjust a nut of part B against a hole on the damper casing and fasten it with M6x40 mm hexagon head screw DIN 931 with washer M6/6,4 DIN 7349
4) Repeat the procedure on the other side of the VRM-Q and an opposite side "A" of the fire damper

1 FDMA
2 VRM-Q
3 Part A of VRM-Q
4 Part B of VRM-Q
5 Hexagon head screw M6x40 mm DIN 931
6 Washer M6/6,4 DIN 7349

Protective cladding boards

- Protective cladding boards must be used as part of the penetration filling of installation with Ablative Coated Batt.
- Can be ordered from MANDIK (installed on the damper or as an accessory) or can be sourced from local supplier
- If protective cladding boards are required, this must be specified in the ordering key
- Boards are made of PROMATECT-MST, thickness 30 mm.
- Glue K84 is not included in the package

Assembly procedure

1) Apply K84 glue over the entire surface
2) Attach protective cladding boards to the damper and glue them to the casing
3) Created gaps fill with K-84 PROMAT glue

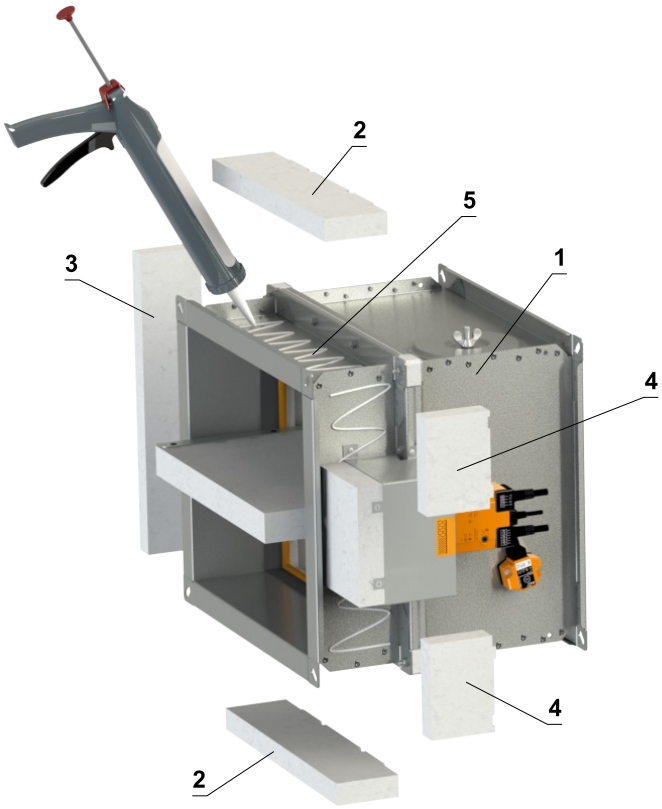

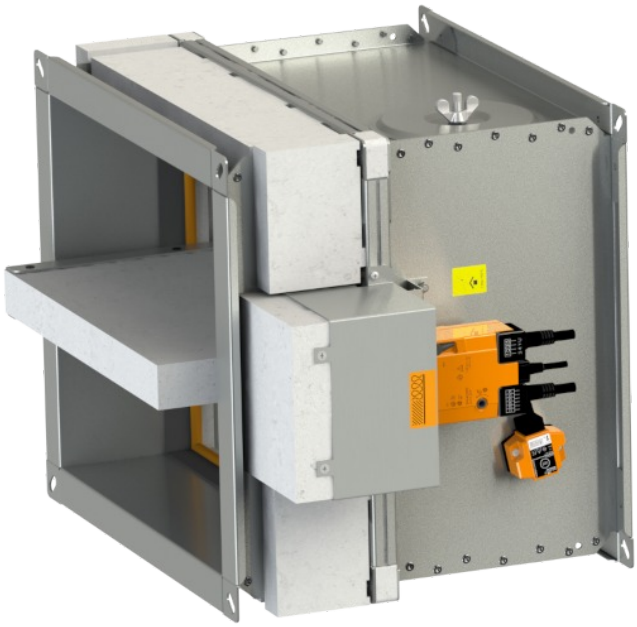

1 FDMA
2 Part A
3 Part B
4 Part C
5 Glue K-84 PROMAT

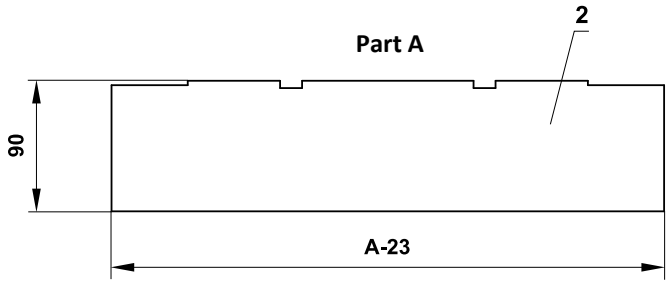

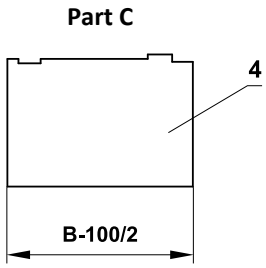

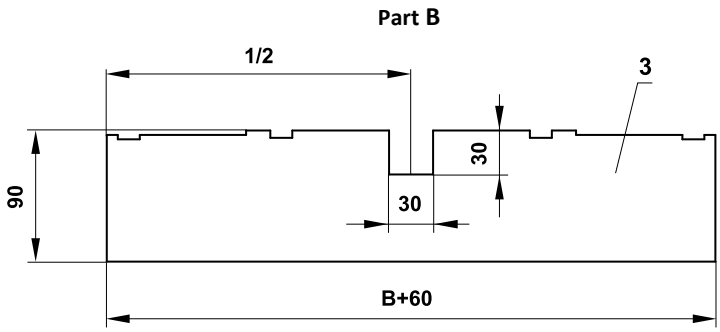

Commissioning and revisions

- Before putting the damper into operation, serviceability checks and functional tests must be carried out including testing of functionality of all electrical elements. After putting into operation these serviceability checks must be carried at least twice a year. If no defect is found during two subsequent serviceability checks, these checks can be carried out once a year.
- In case that dampers are found unable to serve for their function for any cause, it must be clearly marked. The operator is obliged to ensure that the damper is put into condition in which it is ready for function and meanwhile he is obliged to provide the fire protection by another appropriate way.
- Results of regular checks, imperfections found and all-important facts connected with the damper function must be recorded in the "FIRE BOOK" and immediately reported to the operator.
- Before entering the dampers with actuator into operation after their assembly and by sequential checks. Check of blade rotation into the breakdown position "CLOSED" can be done after disconnecting the actuator supply (e.g. by pressing the test button at the thermoelectric activation device BAT or disconnecting the supply from ELECTRICAL FIRE SIGNALISATION). Check of blade rotation back into the "OPEN" position can be done after restoration of power supply (e.g. by releasing the test button or restoration of supply from ELECTRICAL FIRE SIGNALISATION). Without power supply, the damper can be operated manually and fixed in any required position. Release of the locking mechanism can be achieved manually or automatically by applying the supply voltage. It is recommended to provide periodical checks, maintenance and service actions on fire equipment by authorized persons. The authorized persons can be trained by producer, or by authorized distributor. All effective safety standards and directives must be observed during fire damper assembly.
- Visual inspection of proper damper installation, inner area of a damper, damper blade, contact surfaces and silicon seal.

Following checks must be carried out for dampers with manual control

Check of a manual control and thermal fuse

- **To check the function of the manual control proceed as follows:**
- Turn the damper blade to "CLOSED" position as follows:
  - The damper blade is in "OPEN" position.
  - By pressing the activation lever ("OPEN" position), release the control lever to turn the damper blade to the "CLOSED" position.
  - Check the damper blade rotation to "CLOSED" position.
  - The closing of the damper blade must be smooth and fast and the control lever shall be in „CLOSED“ position.(If the damper is not closing strongly enough and the control lever is not reliably locked by the latch in the "CLOSED" position, it is necessary to set a higher preload of the closing spring using the toothed rosette)
- Turn the damper blade to "OPEN" position as follows:
  - Release the latch in the "CLOSED" position by pressing and return the control lever to the second end position, where the lever is held by the trigger lever in the "OPEN" position.
  - Check the damper blade rotation to "OPEN" position.
  - In the case of a damper with an electromagnet, a test of moving the control lever to the "CLOSED" position is performed after connecting the electrical voltage.
- **Check of function and condition of the thermal fuse:**
  - By removing the thermal fuse from the pin of the triggering device, its correct function is checked.
  - The pin must be extended and the triggering lever must be flipped (position "OPEN").
  - If this does not happen, it is necessary to check the pin and spring of the triggering device, or replace the base plate. The base plate is attached to the damper body with three M5 screws with nuts.

Following checks must be carried out for dampers with actuator

- Check the rotation of the blade to "CLOSED" failure position after disconnection the power supply of the actuator (e.g. by pressing the test button on the thermoelectric activation device BAT or by disconnection the power supply from electrical fire signalization). Check the rotation of the blade back to "OPEN" position by restoring the power supply to the actuator (e.g. by releasing the test button or by restoring the power supply from electrical fire signalization).

Following checks must be carried out for dampers with optical smoke detector

- The function checks of the optical smoke detector are to be carried out by employees of an authorized organization who have corresponding electrotechnical qualification and have been properly trained by the manufacturer. The function checks are to be carried out as a part of function checks of the fire dampers, at least 1x a year.
- For the function checks, the damper blade should be in "CLOSED" position with the fan off or with closed air regulation situated between the fan and the fire damper.

- Inspection opening disassembly
  - Release the covering lid by turning the wing nut and while turning the lid right or left release it from the security belt. Then tilt the lid and remove it from its original position.

Inspection opening detail

- Ensure each damper is fully checked for operational capability, control should be initiated from the control system or by manual control. Damper blades should open and close correctly and operation should be visually inspected and documented prior to handover.

How to proceed after Tf1 or Tf2 fuses have been activated

- If the thermal fuse **Tf1** is interrupted (due to temperature outside the duct), it is necessary to replace the spring return actuator. → see page 13
- If the thermal fuse **Tf2** is interrupted (due to temperature inside the duct) , only the spare part ZBAT 72 (95/120/140) needs to be replaced (acc.to the activation temperature). → see page 13

X. ORDERING INFORMATIONS

Ordering key

1	2	3		4	5	6	7	8		9	10	11
FDMA	EN	800x700	/	375	.40	120	A	Q30	-	ZN	IW	G

EXAMPLES:

FDMA EN 800x700/375 .40 Q30-ZN

Fire damper FDMA, dimension 800x700 mm, built length 375 mm, control design with spring return actuator AC 230 V, standard activation temperature 72 °C, flange dimension 30 mm, galvanized material variant, without installation kit/frame, standard silicon seal.

FDMA EN 800x700/375 .40 120 A Q30-ZN IW G

Fire damper FDMA, dimension 800x700 mm, built length 375 mm, control design with spring return actuator AC 230 V, activation temperature 120 °C, with protective cladding boards, flange dimension 30 mm, galvanized material variant, impregnation against humidity, Silicone-free rubber.

1| Fire damper type - FDMA

2| Country of destination

3| Damper dimensions A x B → see pages 18 to 23

"A" is the width of the damper

"B" is the height of the damper

4| Built length - 375 mm

5| Damper design

.01	Manual control and thermal
.02	Manual control and thermal (Zone 1,2)
.11	Manual control and thermal with a terminal switch („CLOSED“)
.12	Manual control and thermal with a terminal switch („CLOSED“) (Zone 1,2)
.20	Manual, thermal and with an electromagnet AC 230 V
.21	Manual, thermal and with an electromagnet AC/DC 24 V
.23	Manual, thermal and with an electromagnet AC 230 V, with a terminal switch („CLOSED“)
.24	Manual, thermal and with an electromagnet AC/DC 24 V, with a terminal switch („CLOSED“)
.30	Manual, thermal and with an electromagnet AC 230 V (ZONE 2)
.33	Manual, thermal and with an electromagnet AC 230 V, with a terminal switch („CLOSED“) (ZONE 2)
.40	With actuating mechanism BF 230-TN (BFL, BFN 230-T)
.41	With actuating mechanism BF 24-TN (BFL, BFN 24-T) , with smoke detector ORS 142 K and with supply device BKN 230-24-MOD (voltage AC 230 V
.42 *	With actuating mechanism ExMax-15-BF (AC 230 V, AC/DC 24 V) with thermoelectrical starting mechanism (ZONE 1,2)
.50	With actuating mechanism BF 24-TN (BFL, BFN 24-T)
.51	With actuator BF 24-TN (BFL, BFN 24-T), with smoke detector ORS 142 K (voltage AC/DC 24 V)
.63	With communication and supply device BKN 230-24-MOD, with actuating mechanism BF 24-TN-ST (BFL, BFN 24-T-ST) and with smoke detector ORS 142 K
.80	Manual control and thermal with two terminal switches („OPEN“, „CLOSED“)
.81	Manual and thermal with two terminal switches („OPEN“, „CLOSED“) (ZONE 1,2)
.82	Manual, thermal and with an electromagnet AC 230 V, with two terminal switches („OPEN“, „CLOSED“)
.83	Manual, thermal and with an electromagnet AC/DC 24 V., with two terminal switches („OPEN“, „CLOSED“)
.85	Manual, thermal and with an electromagnet AC 230 V, with two terminal switches („OPEN“,„CLOSED“) (ZONE 2)

** These designs are supplied only with an activation temperature of 72 °C.*

6| Activation temperature

Manual control		Spring return actuator control	
	72 °C *		72 °C *
104	104 °C	95	95 °C
147	147 °C	120	120 °C
		140	140 °C

** Standard activation temperature*

7| Installation kit/frame

	Without installation kit/frame
A	With protective cladding boards (for Ablative Coated Batt installation)
VRM-Q	Reinforcing frame VRM-Q

8| Flange dimension

Q30	Flange width 30 mm
Q20	Flange width 20 mm

9| Material and other design options

ZN	Galvanized
A2	Stainless steel 1.4301 (AISI 304)
A4	Stainless steel 1.4404 (AISI 316L) - included damper blade impregnation against chemical - type PROMAT SR

10| Surface treatment

	Without surface treatment
IW	Damper blade impregnation, impregnating agent PROMAT 2000 - impregnation against humidity
IA	Damper blade impregnation, impregnating agent PROMAT SR - impregnation against chemical

11| Cold seal variant

	Silicone rubber *
G	Silicone-free rubber

** Standard cold seal*

Accessories

Protective cladding boards

1	2	3
CLADDING BOARDS	FDMA	800x700

1| Accessory type - cladding boards

2| Fire damper type - FDMA

3| Damper dimensions A x B → see pages 18 to 23

Reinforcing frame VRM-Q

1	2	3
VRM-Q	FDMA	800x700

1| Accessory type - reinforcing frame VRM-Q

2| Fire damper type - FDMA

3| Damper dimensions A x B → see pages 18 to 23

Data label

- Data label is placed on the damper casing (example)

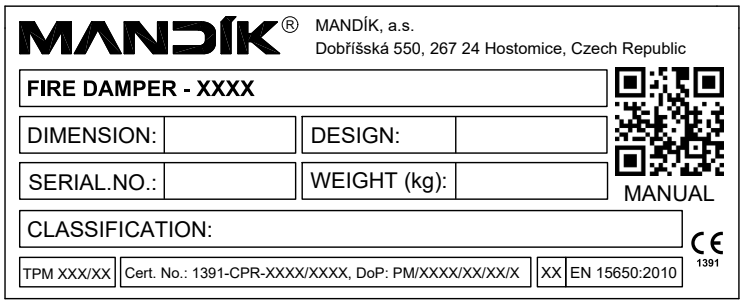

The producer reserves the right for innovations of the product.
For actual product information see www.mandik.com

MANDÍK®

www.mandik.com

MANDÍK, a.s. • Dobříšská 550 • 267 24 Hostomice • Czech Republic • Tel.: +420 311 706 742 • E-Mail: mandik@mandik.cz