MANDÍK

TPM 178/25
Version 2026-10-23

FDMA 120

Fire damper

Technical Documentation
Installation, Commissioning, Operation, Maintenance and Service Manual

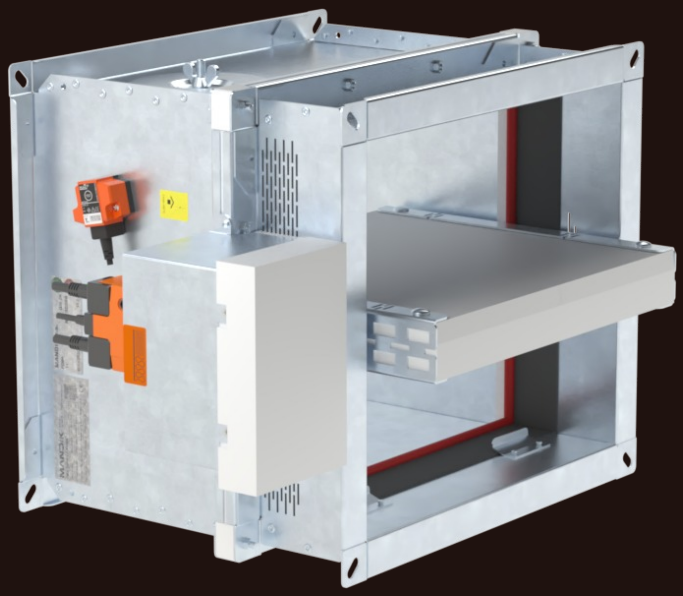

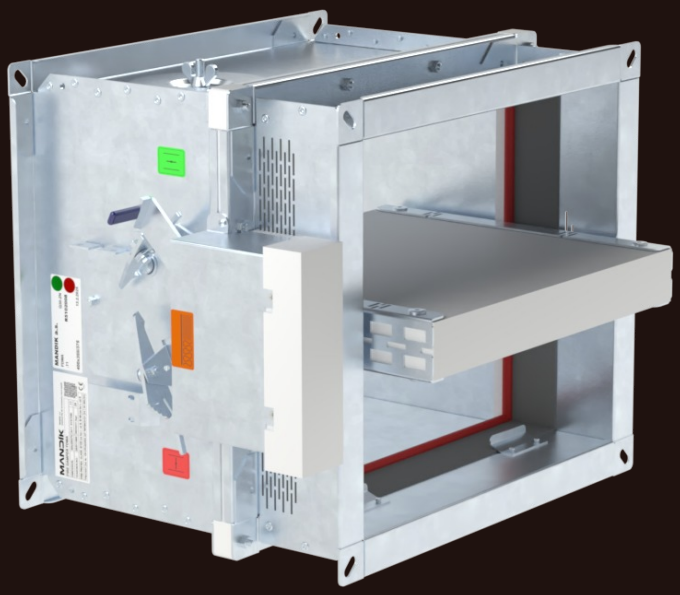

CE
1391

MANDÍK®
www.mandik.com

MANDÍK, a. s. • Dobříšská 550 • 267 24 Hostomice • Czech Republic • Tel.: +420 311 706 742 • E-Mail: mandik@mandik.cz

These technical specifications state a row of manufactured sizes and models of fire dampers FDMA 120.
It is valid for production, designing, ordering, delivery, maintenance and operation.

CONTENT

I. GENERAL....3
Description....3
II. DESIGN....4
Design with manual control....4
Design with spring return actuator....6
III. DIMENSIONS....13
Technical parameters....15
IV. INSTALLATION....21
Placement and installation....21
Statement of installations....23
In solid wall construction....24
In gypsum wall construction....25
In solid ceiling construction....26
V. SUSPENSION SYSTEMS....27
Example of duct connection....30
VI. TECHNICAL DATA....31
Pressure loss....31
Noise data....33
VII. MATERIAL, FINISHING....34
VIII. TRANSPORTATION, STORAGE AND WARRANTY....35
Logistic terms....35
Warranty....35
IX. ASSEMBLY, ATTENDANCE AND MAINTENANCE....36
Commissioning and revisions....37
X. ORDERING INFORMATIONS....39
Ordering key....39
Data label....40

I. GENERAL

Description

Fire dampers are shutters in ducts of air-conditioning devices that prevent the spread of fire and combustion products from one fire segment to the other one by means of closing the duct in the points of fire separating constructions.

Damper blade automatically closes air duct using a closing spring or a spring return actuator. The closing spring is activated by releasing the control lever on the manual control or by melting a thermal fuse.

The return spring of the actuator is actuated when a thermoelectric activation device BAT is activated, when a test button on BAT is pressed or when power supply of the actuator is interrupted.

After closing the blade, the damper is sealed with silicon against smoke penetration. On request by customer, the damper can be supplied silicon-free. In the closed position, the damper is also sealed with material which increases its volume due to increasing temperature and air proofs the air duct.

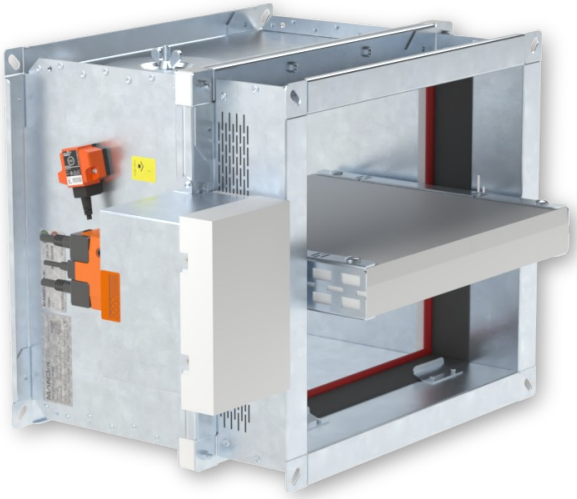

FDMA 120 with spring return actuator

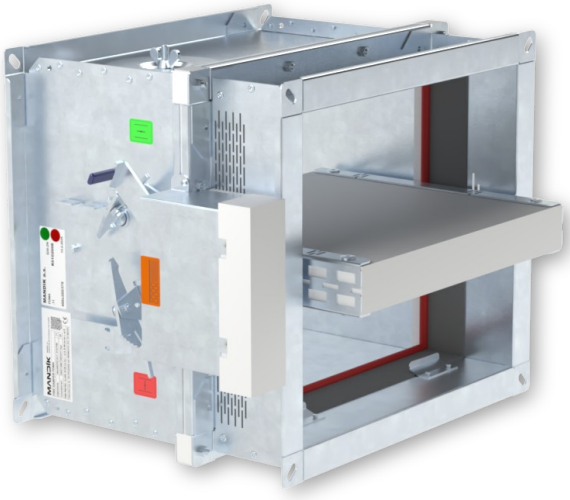

FDMA 120 with manual control

Damper characteristics

- CE certified acc. to EN 15650
- Tested in accordance with EN 1366-2
- Classified acc. to EN 13501-3+A1
- External casing leakage: class ATC 3 (old marking “C“), Internal leakage class 2 acc. to EN 1751
- Cycling test in class C_{10000} acc. to EN 15650
- Corrosion resistant acc. to EN 15650
- Certificate of constancy of performance No. 1391-CPR-XXXX/XXXX
- Declaration of Performance No. PM/FDMA 120/01/XX/X
- Hygienic assessment of fire dampers - Report No. 1.6/pos/19/19b

Working conditions

- Exact damper function is provided under the following conditions:
  - maximum air velocity 12 m/s
  - maximum pressure difference 1200 Pa
  - the air circulation in the whole damper section must be secured steady over the entire surface.
- Dampers can be installed with a horizontal blade axis.
- Dampers are suitable for systems without abrasive, chemical and adhesive particles.
- Dampers are designed for macroclimatic areas with mild climate according to EN IEC 60 721-3-3 ed.2., class 3K22. (Environment 3K22 is typically protected place with regulated temperature)
- Temperature in the place of installation is permitted to range from -30°C to +50°C.

II. DESIGN

Design with manual control

Design .01

- Design with manual control with a thermal fuse which actuates the shutting device, after the nominal activation temperature 72°C has been reached.
- Automatic initiation of the manual control is not activated if the temperature does not exceed 70°C.
- In case that other activation temperatures are required, thermal fuses with nominal activation temperature +104°C or +147°C can be supplied (this requirement must be specified in the order).

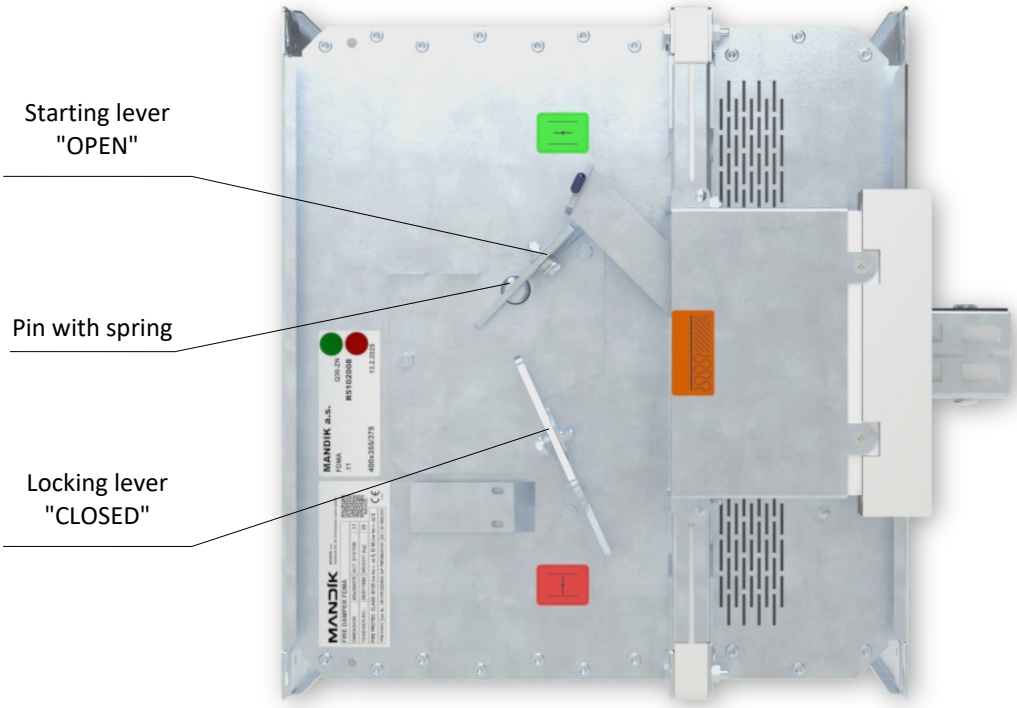

Design .01

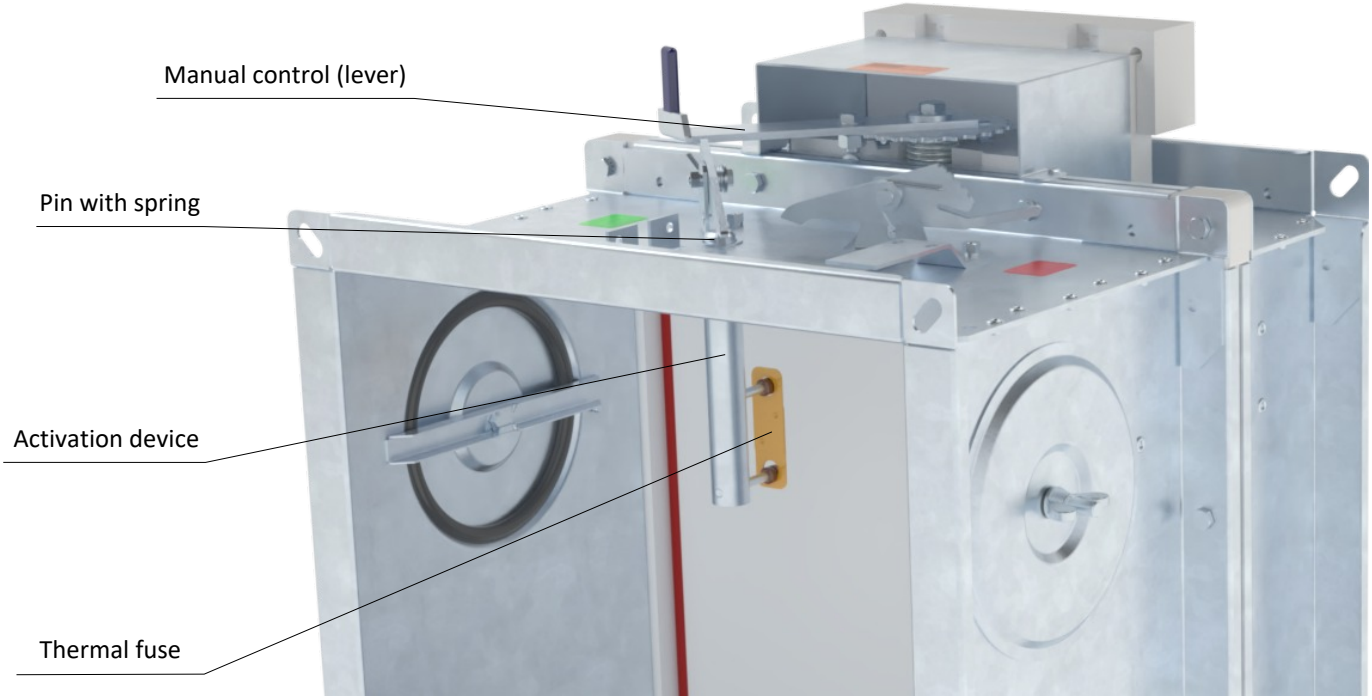

Detail of the manual control, thermal fuse and activation device

Design .11

- Design .01 with manual control can be complemented with a limit switch signaling of the damper blade position "CLOSED".

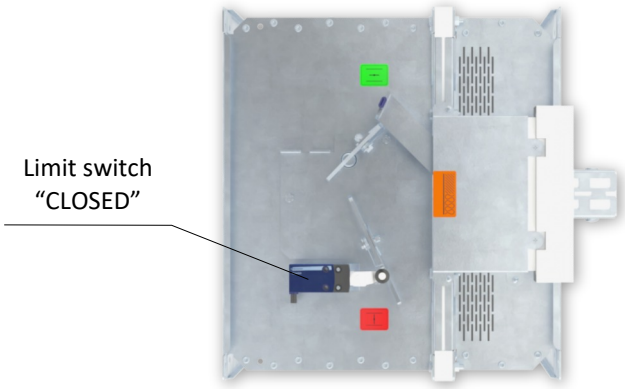

Design .11

Design .80

- Design .80 with manual control can be complemented with two limit switches signaling of the damper blade position "CLOSED" and "OPEN".

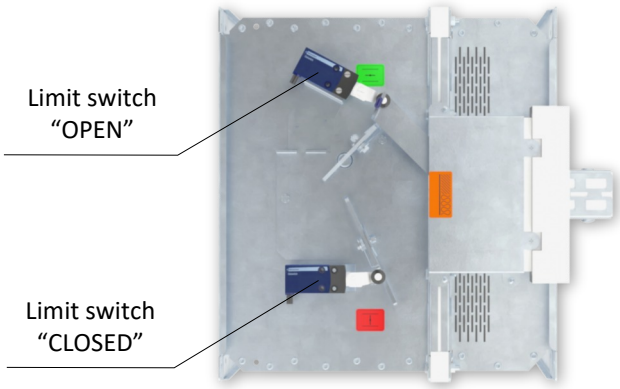

Design .80

Fusible link replacement:*

1. The mechanism (damper) must be in the closed position (indicated by the red area on the sticker).
2. Release the control lever.
3. Using adjustable pliers, squeeze the fusible link clips together.
4. Pull the fusible link out of the clips.
5. Using adjustable pliers, squeeze the fusible link clips together again.
6. Insert the new fusible link into the clips.

Function check:**

7. Otevřete mechanismus (klapku) přesunutím páky do polohy Open (označené zelenou oblastí na štítku).
8. Release the control lever and check that the mechanism closes properly. Repeat this procedure at least 3 times.

* The mechanism can be removed for change of the fusible link.
** Caution: Risk of injury from moving parts.

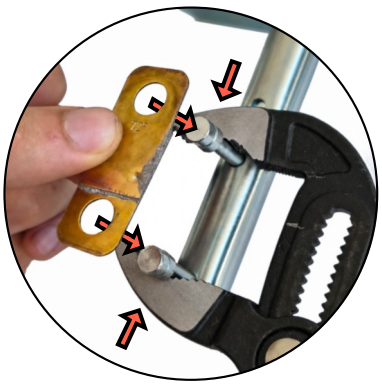

Limit switch XCKN2118G11

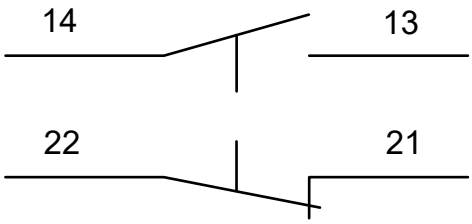

Nominal voltage and max. current	AC 240 V; 3 A DC 250 V; 0,1 A
Degree of protection	IP 65
Ambient temperature	-25°C … +70°C

Design with spring return actuator

Design .40 and .50

- The fire dampers are equipped with Belimo spring return actuators with thermoelectric activation device BAT. The spring return actuator types are BFL, BFN or BF depending on the damper size. (Further mentioned as „actuator“).
- After being connected to power supply 230V or AC/DC 24V, the actuator rotates the damper blade to the operating position "OPEN" and at the same time pre-stretches its return spring.
- When the actuator is power supplied, the damper blade is in the position "OPEN" and the return spring is pre-stretched.
- Time needed for full opening of the damper blade from the position "CLOSED" to the position "OPEN" is maximum 120 sec. If the actuator power supply is interrupted (due to loss of supply voltage, or pressing a test button on the thermoelectric activation device BAT), the actuator rotates the damper blade to the breakdown position "CLOSED".
- The time of closing the damper blade from the position "OPEN" to the position "CLOSED" takes maximum 20 sec.
- In case that the power supply is restored again (the blade can be in any position), the actuator starts to rotate the damper blade back to the position "OPEN".
- A thermoelectric activation device BAT, which contains two thermal fuses Tf1 and Tf2, is an integral part of the actuator.
- These fuses are activated when temperature +72°C has been reached (the fuse Tf1 due to temperature outside the duct and the fuse Tf2 due to temperature inside the duct). The thermoelectric activation device can also be equipped with a Tf2 thermal fuse type ZBAT 95/120/140 (must be specified in the order). In this case, the activation temperature inside the duct is +95°C, +120°C or +140°C (depending on the type).
- After the thermal fuse Tf1 or Tf2 has been activated, the power supply is permanently and irreversibly interrupted and the actuator, by means of the pre-stretched spring, rotates the damper blade into the breakdown position "CLOSED".
- Signalisation of damper blade position "OPEN" and "CLOSE" is provided by two microswitches.

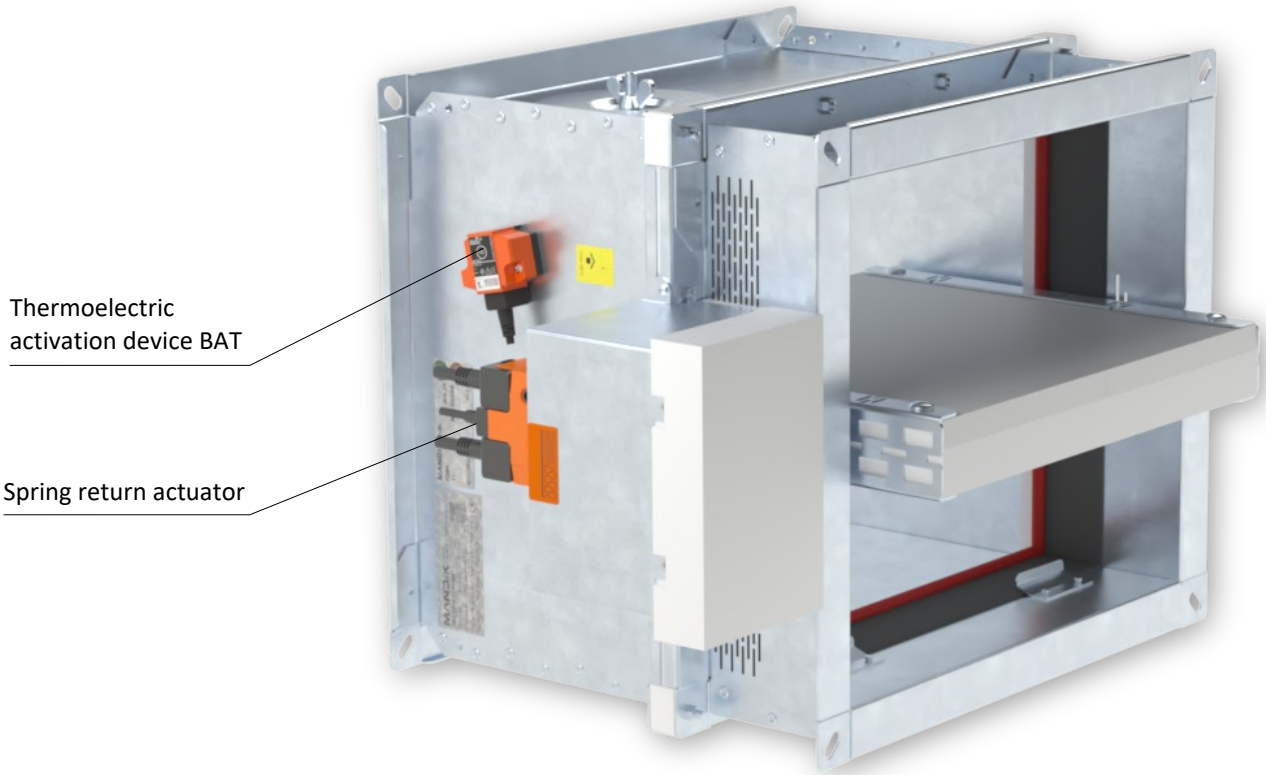

Design.40 and .50

Actuator BELIMO BFL 230-T

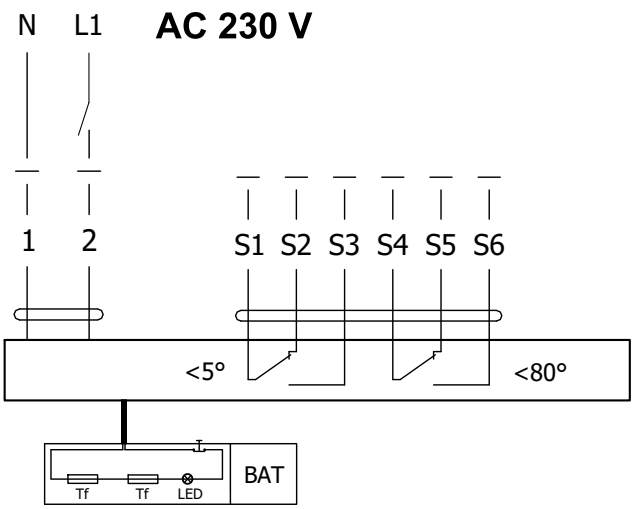

Actuator BELIMO BFL 24-T(-ST)

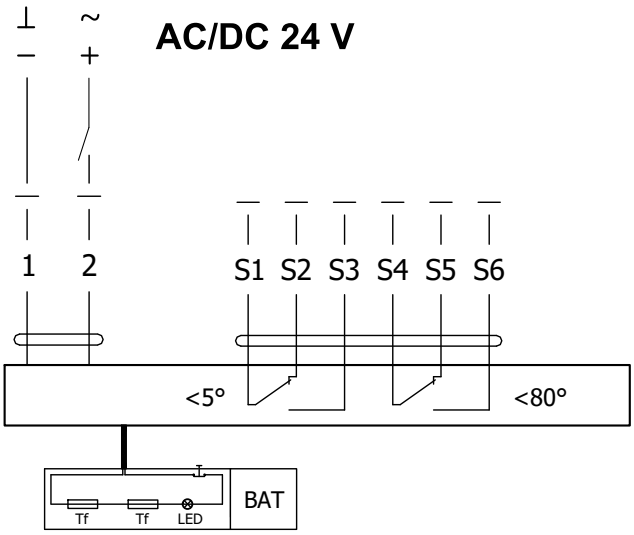

Actuator BELIMO BFL 230-T(-ST), BFL 24-T(-ST)		
Actuator BELIMO - 4 Nm/ 3 Nm Spring	**BFL 230-T(-ST)**	**BFL 24-T(-ST)**
Power voltage	AC 230 V 50/60Hz	AC/DC 24 V 50/60Hz
Power consumption - in operation - in rest position	2,6 W 0,7 W	2,0 W 0,7 W
Dimensioning	4 VA (Imax 4 A @ 5 ms)	2,8 VA (Imax 2,9 A @ 5 ms)
Protection class	II	III
Degree of protection	IP 54	
Running time - motor - spring return	< 60 s ~ 20 s	
Ambient temperature - normal duty - safety duty - non-operating temperature	 -30°C … +55°C The safe position will be attained up to max. +75°C -40°C … +55°C	
Connection - supply/control - auxiliary switch	cable 1 m, 2 x 0,75 mm² (BFL 2xx-T-ST) with 3-pin plug-in connectors cable 1 m, 6 x 0,75 mm² (BFL 2xx-T-ST) with 6-pin plug-in connectors	
Response temperature thermal fuse	duct outside temperature +72°C duct inside temperature +72°C	

Actuator BELIMO BFN 230-T

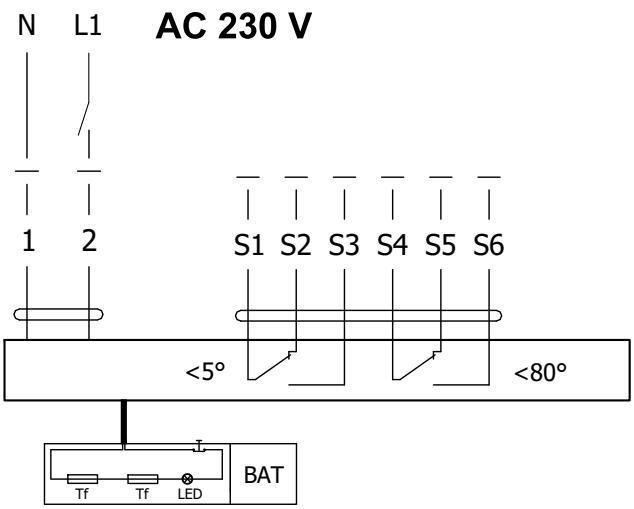

Actuator BELIMO BFN 24-T(-ST)

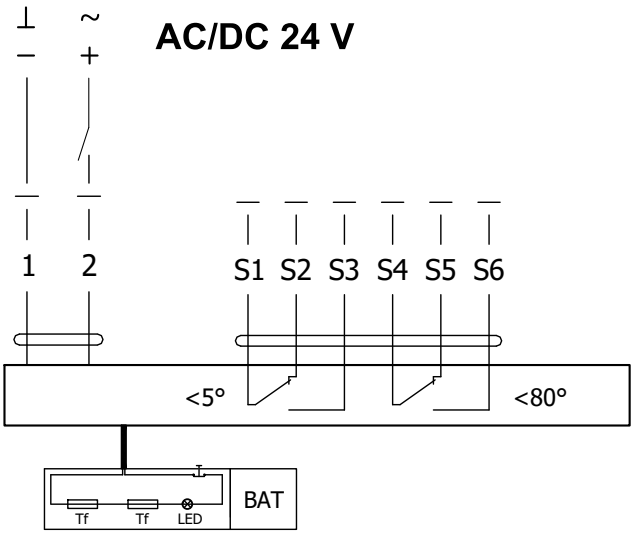

Actuator BELIMO BFN 230-T(-ST), BFN 24-T(-ST)		
Actuator BELIMO - 9 Nm/ 7 Nm Spring	**BFN 230-T(-ST)**	**BFN 24-T(-ST)**
Power voltage	AC 230 V 50/60Hz	AC/DC 24 V 50/60Hz
Power consumption - in operation - in rest position	3,5 W 1,3 W	3,2 W 1,2 W
Dimensioning	6,5 VA (Imax 4 A @ 5 ms)	4,3 VA (Imax 2,9 A @ 5 ms)
Protection class	II	III
Degree of protection	IP 54	
Running time - motor - spring return	< 60 s ~ 20 s	
Ambient temperature - normal duty - safety duty - non-operating temperature	 -30°C … +55°C The safe position will be attained up to max. +75°C -40°C … +55°C	
Connection - supply/control - auxiliary switch	cable 1 m, 2 x 0,75 mm² (BFN 2xx-T-ST) with 3-pin plug-in connectors cable 1 m, 6 x 0,75 mm² (BFN 2xx-T-ST) with 6-pin plug-in connectors	
Response temperature thermal fuse	duct outside temperature +72°C duct inside temperature +72°C	

Actuator BELIMO BF 230-TN

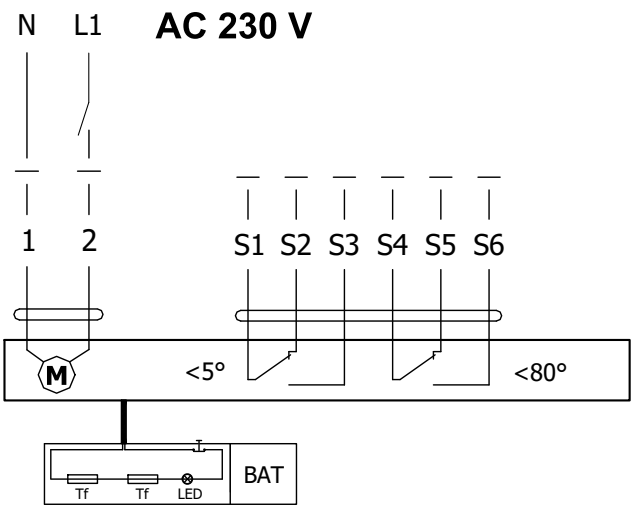

Actuator BELIMO BF 24-TN (-ST)

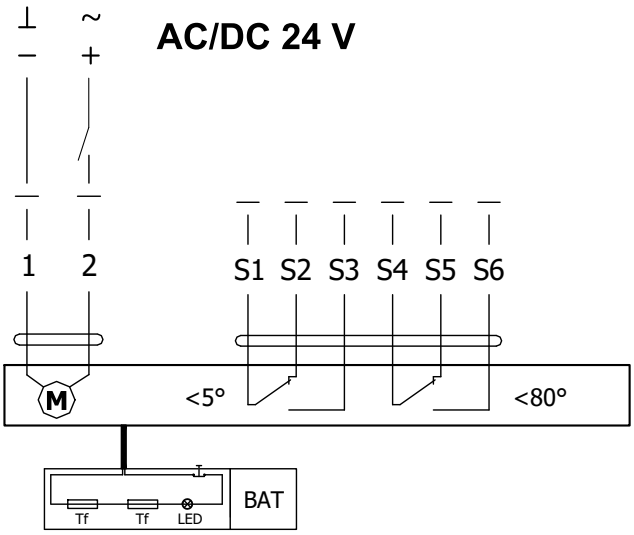

Actuator BELIMO BF 230-TN(-ST), BF 24-TN(-ST)		
Actuator BELIMO - 18 Nm/ 12 Nm Spring	**BF 230-TN(-ST)**	**BF 24-TN(-ST)**
Power voltage	AC 230 V 50/60Hz	AC/DC 24 V 50/60Hz
Power consumption - in operation - in rest position	8,5 W 3 W	7 W 2 W
Dimensioning	11 VA (Imax 8,3 A @ 5 ms)	10 VA (Imax 8,3 A @ 5 ms)
Protection class	II	III
Degree of protection	IP 54	
Running time - motor - spring return	120 s ~ 16 s	
Ambient temperature - normal duty - safety duty - non-operating temperature	 -30°C … +50°C The safe position will be attained up to max. +75°C -40°C … +50°C	
Connection - supply/control - auxiliary switch	cable 1 m, 2 x 0,75 mm² (BF 2xx-TN-ST) with 3-pin plug-in connectors cable 1 m, 6 x 0,75 mm² (BF 2xx-TN-ST) with 6-pin plug-in connectors	
Response temperature thermal fuse	duct outside temperature +72°C duct inside temperature +72°C	

Thermoelectric activation device BAT

- If the thermal fuse Tf1 is interrupted (due to temperature outside the duct), it is necessary to replace the spring return actuator. Thermoelectric activation device BAT is integral part of the actuator.
- If the thermal fuse Tf2 is interrupted (due to temperature inside the duct), only the spare part ZBAT 72 (95/120/140) needs to be replaced (acc.to the activation temperature).
- When one of the thermal fuses responds, the supply voltage is interrupted permanently and irreversibly.
- The function (interruption of the supply voltage) can be checked by pressing the test button.
- Installation is carried out with the pre-assembled, self-tapping screws.

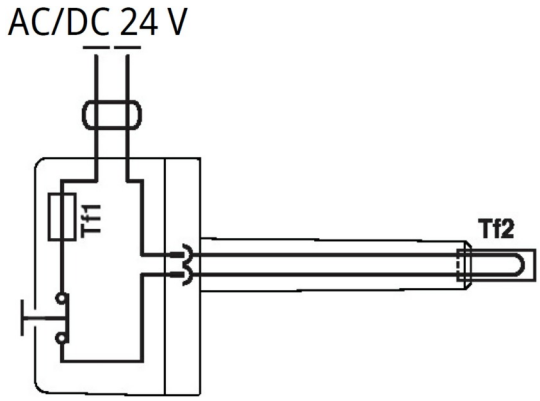

BELIMO ZBAT 72
Black (BK) = 72°C (standard)

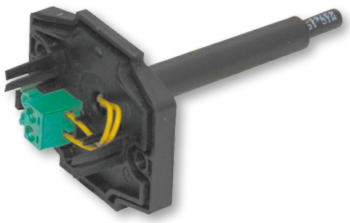

BELIMO ZBAT 95
Grey (GY) = 95°C

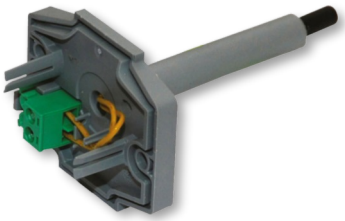

BELIMO ZBAT 120
Orange (OG) = 120°C

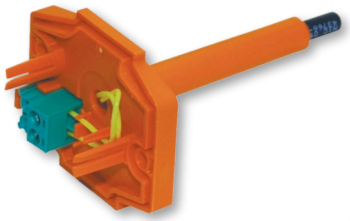

BELIMO ZBAT 140
Red (RD) = 140°C

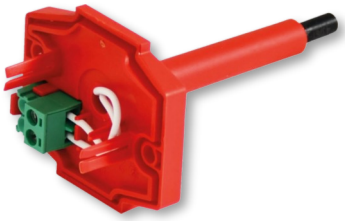

Thermoelectric activation device BAT 72 (95/120/140)	
Power voltage	AC/DC 24 V 50/60Hz
Rated current	1 A
AC/DC throughput resistance	<1 Ω
Protection class	III
Degree of protection	IP 54
Probe length	65 mm
Ambient temperature Storage temperature Ambient humidity	-30°C … +50°C -40°C … +50°C Max. 95% RH, non-condensing
Connection supply	Cable 1 m, 2 x 0.5 mm², Betaflam cable heatresistant up to 145°C
Response temperature thermal fuse	Duct inside temperature +72 (95/120/140)°C Duct outside temperature +72 (95/120/140)°C

Design .41 and .51

- Design .41 or .51 with actuator and smoke detector ORS 142 K. The voltage can be AC 230 V or 24 V DC. Design .41 with voltage AC 230 V is equipped with communication and supply device BKN 230-24-MOD and with actuator BF 24-TN (BFL 24-T, BFN 24-T).
- The smoke detector is activated when smoke spreads in air duct system. Deactivation of the smoke detector alarm status is provided by interruption of supply voltage for min. 2s.
- Signalisation of damper blade position "OPEN" and "CLOSE" is provided by two microswitches.
- For sizes A<180 mm or B<180 mm, the optical smoke detector ORS 142 K is not part of the fire damper and is supplied separately.

Design .41 with actuator BF 24-TN (BFL, BFN 24-T), with smoke detector ORS 142 K and with supply device BKN 230-24-MOD (voltage AC 230 V)

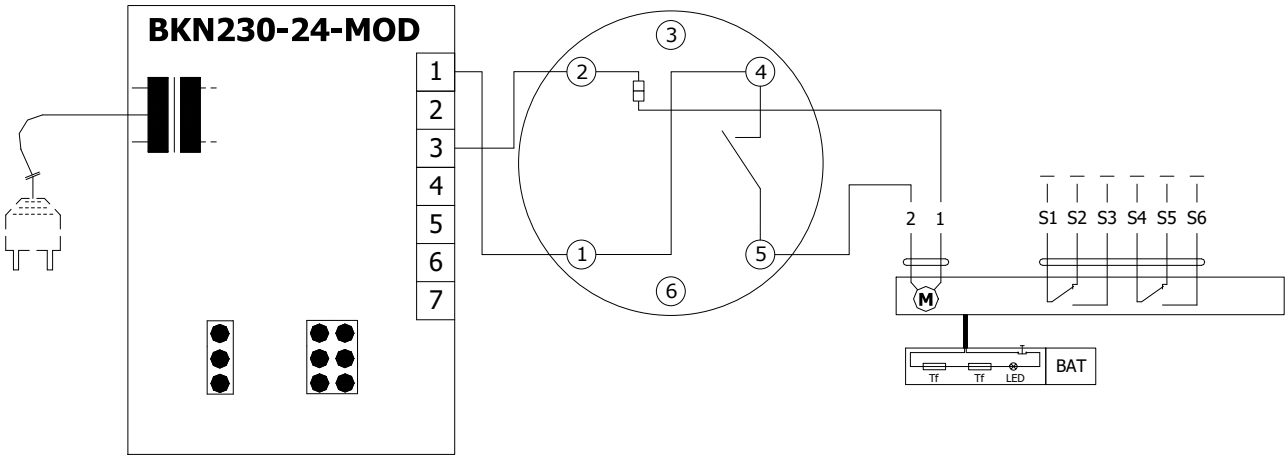

Design .51 with actuator BF 24-TN (BFL, BFN 24-T), with smoke detector ORS 142 K (voltage 24 V DC)

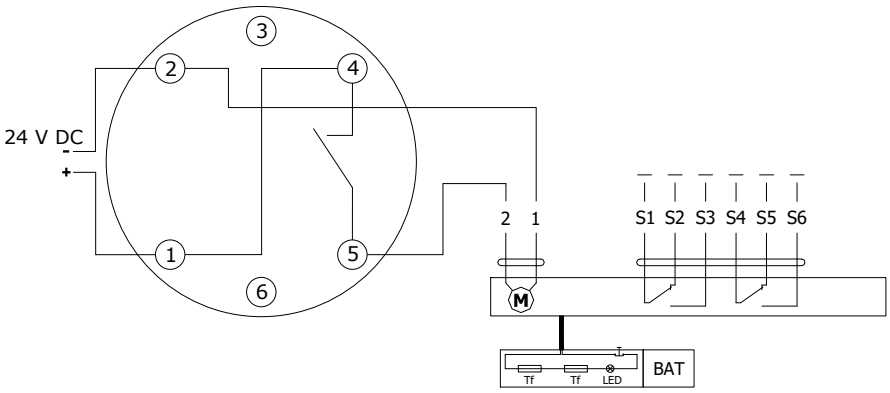

Communication and supply device BKN 230-24-MOD	
Nominal voltage	AC 230 V 50/60Hz
Power consumption	3 W (operating position)
Dimensioning	14 VA (including actuator)
Protection Class	II
Degree of protection	IP 40
Ambient temperature Non-operating temperature	-20°C … +50°C -40°C … +80°C
Connection - net - motor - terminal board	cable 0,9 m with EURO plug type 26 6-pole connector, 3-pole connector screw terminals for cable 2x1,5 mm²

Optical smoke detector ORS 142 K with the socket 143A

- The smoke detector ORS 142 K is used for early smoke detection in rooms or inside the ventilation system.
- The sensor operates on the light scatter principle. Inside the scanning chamber is a light source and a light sensor, in the normal state the light from the source does not fall on the sensor. Only when smoke enters the scanning chamber the light is scattered and falls on the sensor.
- The smoke detector can be connected directly to the actuator (design .41 and .51) which, in case of smoke detection, passes to the safety position, or to the BKN communication and supply device (design .63).
- By early detection of smoke, it can be effectively prevented from spreading of smoke through the ventilation system. In addition to smoke detection, the sensor can distinguish and signal slight and heavy contamination, e.g. the presence of large amounts of dust.
- The ORS 142 K smoke detector has an alarm memory, i.e. if the alarm is triggered, the safety relay opens and stays in this state even if the smoke disappears from the scanning chamber. The sensor remains in the alarm state until the power supply is briefly reset.
- On the pin 3, an external device can be connected via RS-Bus communication to report the status of the sensor.
- Pin 6 has no connection to the detector and is designed as a load-bearing structure in the base.

ORS 142 K

Socket 143A

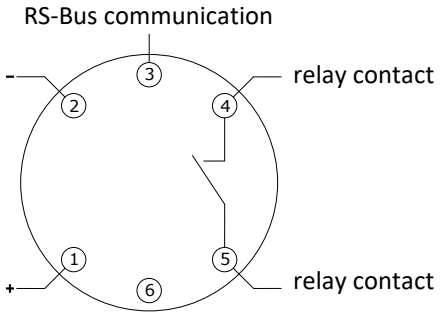

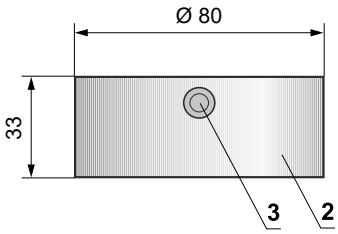

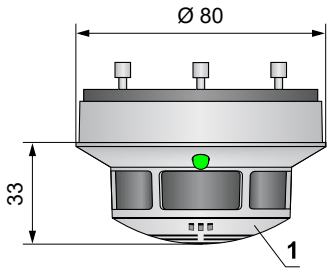

Relay contact		LED	
In operation	4 5	Green	Shines
Slight contamination		Green / Yellow	Flashes
Heavy contamination		Green / Yellow	Flashes
Fault	4 5	Yellow	Shines
Alarm		Red	Shines
Power Off		Off	–

1 ORS 142 K
2 Socket 143A
3 Side cable entries Ø 9mm
4 Rear cable entries Ø 9mm
5 Fixing hole Ø 4,5 mm
6 Fixing hole Ø 3,7 mm

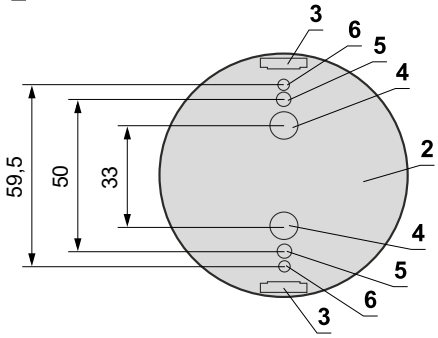

Optical smoke detector ORS 142 K with the socket 143A	
Operating voltage	18 … 28 V DC
Residual ripple	≤ 200 mV
Power Consumption Socket (without actuator)	max. 22 mA
Degree of protection	IP 42
Ambient temperature	-20°C … +75°C
Additional temperature sensor	+70°C
Connection - net - motor - communication and supply device BKN	Cable 1m, connected to terminals 1, 2 and 4 Actuator connected on the terminals 2 and 5 Cablel 1m, connected to terminals 1, 2, 4 and 5

III. DIMENSIONS

FDMA 120 with manual control

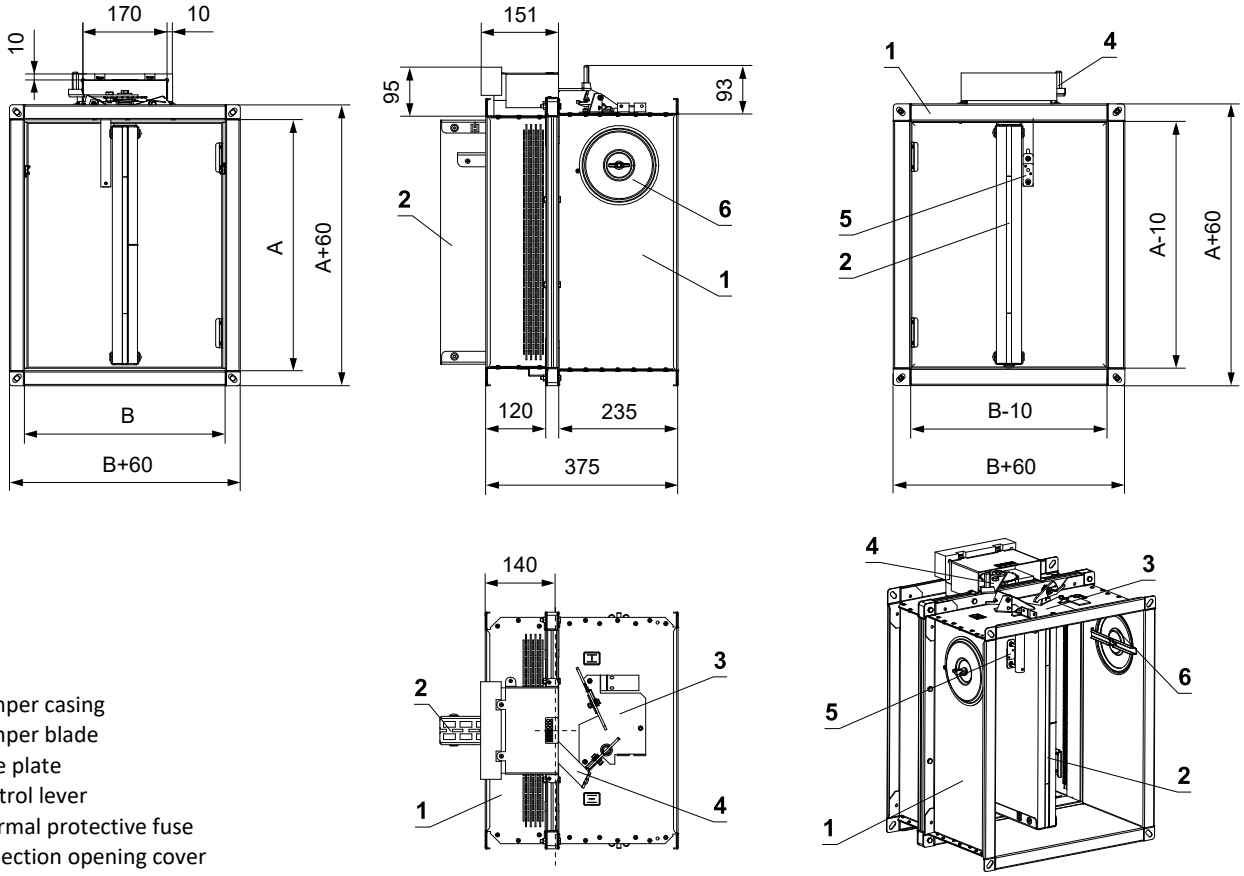

1 Damper casing
2 Damper blade
3 Base plate
4 Control lever
5 Thermal protective fuse
6 Inspection opening cover

FDMA 120 with spring return actuator

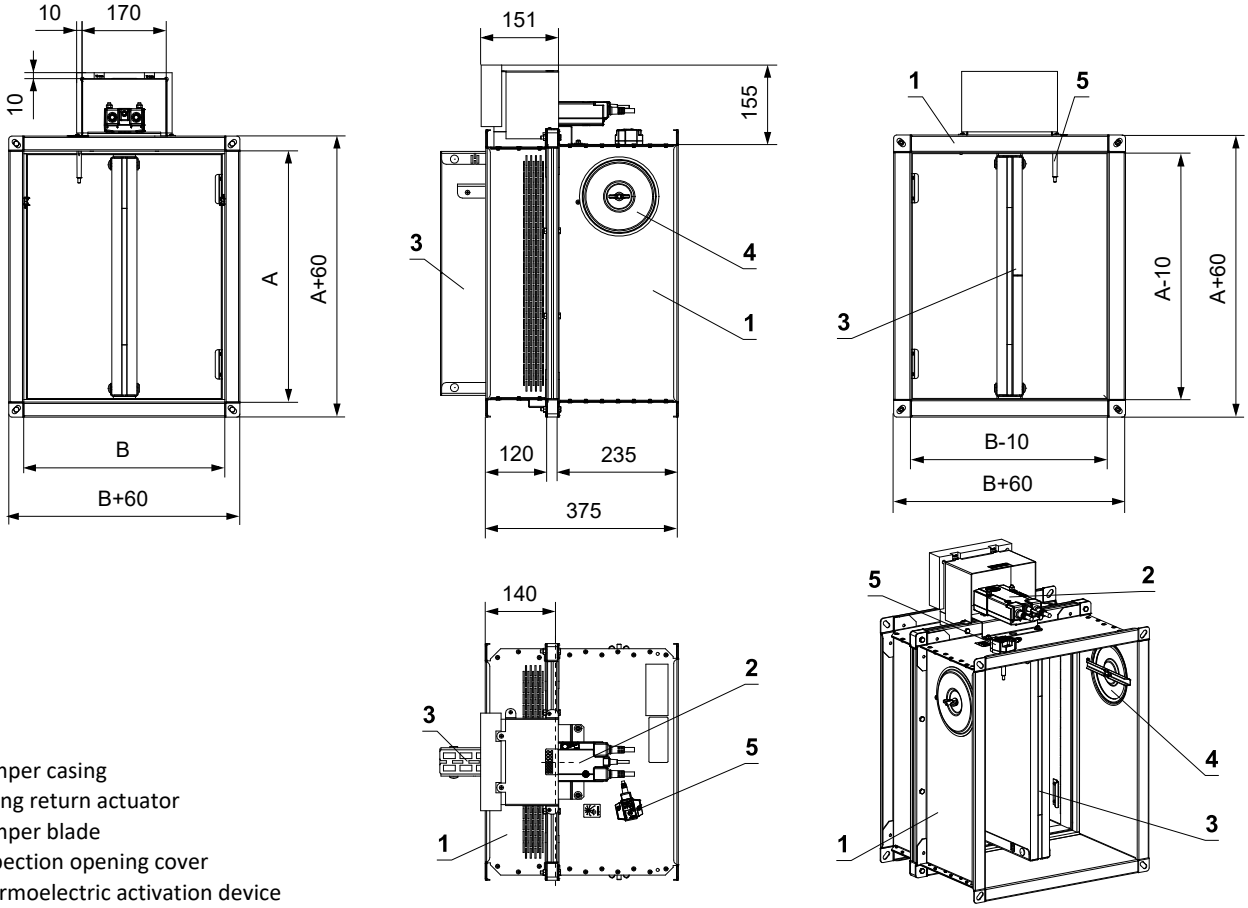

1 Damper casing
2 Spring return actuator
3 Damper blade
4 Inspection opening cover
5 Thermoelectric activation device

Damper blade overlaps

- Open damper blade overlaps the damper casing by the value “a” or “c”. These values are specified in chapter Technical parameters → see pages 15 to 20

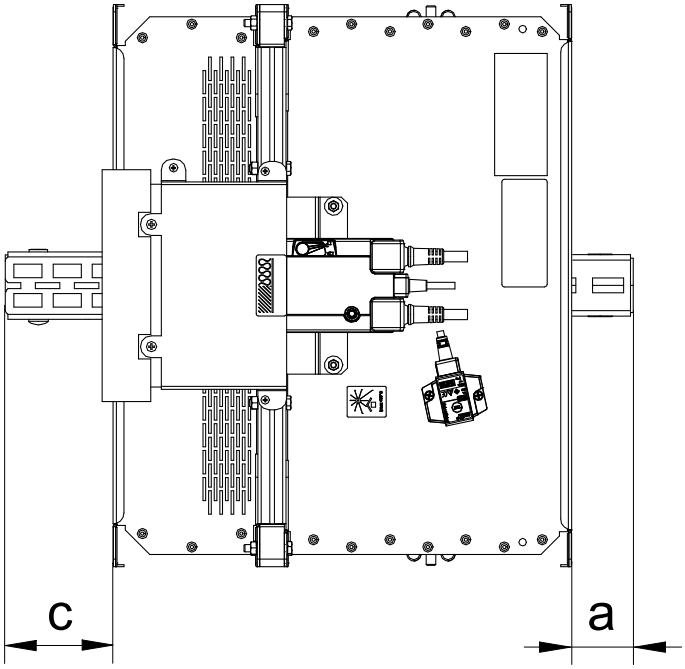

Values "a" and "c" has to be respected when projecting following air-conditioning duct.

Flange of a damper - CONTROL SIDE

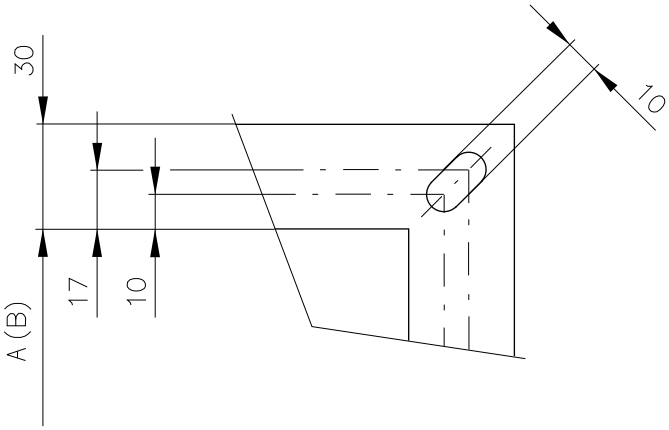

Flange of a damper - INSTALLATION SIDE

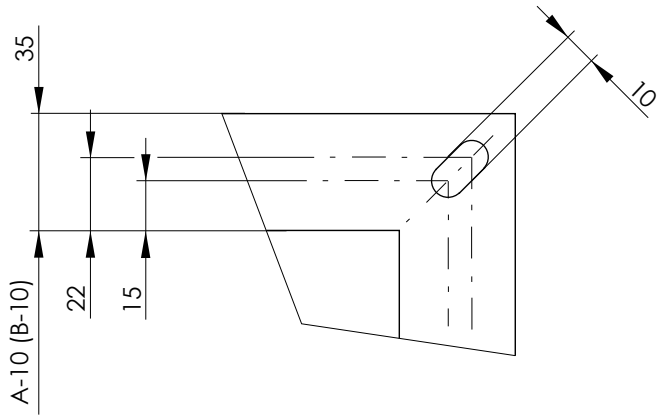

flanges are fitted with oval holes in the corners

Technical parameters

A x B [mm]		Damper blade overlaps a [mm]	Damper blade overlaps c [mm]	Weight Man. [kg]	Weight Actu. [kg]*	Free area S_f [m²]	Spring return actuator
180 x	180	-	-	10,5	11,7	0,0163	BFL
	200	-	-	11	12,2	0,0194	
	225	-	0,5	11,6	12,8	0,0233	
	250	-	13	12,1	13,3	0,0271	
	280	-	28	12,7	13,9	0,0318	
	300	-	38	13,2	14,4	0,0349	
	315	-	46	13,6	14,8	0,0372	
	355	-	66	14,4	15,6	0,0434	
	400	-	88	15,5	16,7	0,0504	
	450	-	113	16,5	17,7	0,0581	
	500	-	138	17,6	18,8	0,0659	
	550	-	163	18,7	19,9	0,0736	
	560	-	168	19	20,2	0,0752	
	600	13	188	19,9	21	0,0814	
	630	28	203	20,4	21,6	0,0860	
	650	38	213	21	22,2	0,0891	
	700	63	238	22	23,6	0,0969	BFN
	710	68	243	22,1	23,7	0,0984	
	750	88	263	23,1	24,7	0,1046	
	800	113	288	24,3	25,9	0,1124	
200 x	180	-	-	11	12,2	0,0184	BFL
	200	-	-	11,4	12,6	0,0219	
	225	-	0,5	12	13,2	0,0263	
	250	-	13	12,6	13,8	0,0306	
	280	-	28	13,2	14,4	0,0359	
	300	-	38	13,8	14,9	0,0394	
	315	-	45,5	14,1	15,3	0,0420	
	355	-	65,5	15	16,2	0,0490	
	400	-	88	16,1	17,3	0,0569	
	450	-	113	17,2	18,4	0,0656	
	500	-	138	18,4	19,6	0,0744	
	550	-	163	19,5	20,7	0,0831	
	560	-	168	19,7	20,9	0,0849	
	600	13	188	20,7	21,9	0,0919	
	630	28	203	21,3	22,5	0,0971	
	650	38	213	21,9	23,1	0,1006	
	700	63	238	22,9	24,5	0,1094	BFN
	710	68	243	23	24,6	0,1111	
	750	88	263	24,1	25,7	0,1181	
	800	113	288	25,3	26,9	0,1269	
	900	163	338	27,5	29	0,1444	
	1000	213	388	29,8	31,4	0,1619	
225 x	180	-	-	11,5	12,6	0,0210	BFL
	200	-	-	11,9	13,1	0,0250	
	225	-	0,5	12,6	13,8	0,0300	
	250	-	13	13,2	14,4	0,0350	
	280	-	28	13,9	15	0,0410	
	300	-	38	14,4	15,6	0,0450	
	315	-	45,5	14,8	16	0,0480	
	355	-	65,5	15,7	16,9	0,0560	
	400	-	88	16,9	18,1	0,0650	
	450	-	113	18	19,2	0,0750	
	500	-	138	19,2	20,4	0,0850	
	550	-	163	20,4	21,6	0,0950	
	560	-	168	20,7	21,9	0,0970	BFL
	600	13	188	21,7	23,3	0,1050	
	630	28	203	22,3	23,9	0,1110	BFN
	650	38	213	22,9	24,5	0,1150	
	700	63	238	24	25,6	0,1250	
	710	68	243	24,2	25,8	0,1270	
	750	88	263	25,3	26,9	0,1350	
	800	113	288	26,5	28,1	0,1450	
	900	163	338	28,8	30,4	0,1650	
	1000	213	388	31,3	34,6	0,1850	BF
250 x	180	-	-	11,9	13,1	0,0236	BFL
	200	-	-	12,5	13,7	0,0281	
	225	-	0,5	13,1	14,3	0,0338	
	250	-	13	13,7	14,9	0,0394	
	280	-	28	14,5	15,7	0,0461	
	300	-	38	15	16,2	0,0506	
	315	-	45,5	15,4	16,6	0,0540	
	355	-	65,5	16,4	17,6	0,0630	
	400	-	88	17,6	18,8	0,0731	
	450	-	113	18,9	20,1	0,0844	
	500	-	138	20,1	21,3	0,0956	
	550	-	163	21,4	22,6	0,1069	
	560	-	168	21,6	22,8	0,1091	
	600	13	188	22,7	24,3	0,1181	BFN
	630	28	203	23,4	25	0,1249	
	650	38	213	24	25,6	0,1294	
	700	63	238	25,2	26,8	0,1406	
	710	68	243	25,3	26,9	0,1429	
	750	88	263	26,4	28	0,1519	
	800	113	288	27,8	29,4	0,1631	
	900	163	338	30,2	31,8	0,1856	
	1000	213	388	32,7	36,1	0,2081	BF
280 x	180	-	-	12,5	13,7	0,0268	BFL
	200	-	-	13,1	14,3	0,0319	
	225	-	0,5	13,8	14,9	0,0383	
	250	-	13	14,4	15,6	0,0446	
	280	-	28	15,2	16,4	0,0523	
	300	-	38	15,8	17	0,0574	
	315	-	45,5	16,2	17,4	0,0612	
	355	-	65,5	17,2	18,4	0,0714	
	400	-	88	18,5	19,7	0,0829	
	450	-	113	19,8	21	0,0956	
	500	-	138	21,2	22,4	0,1084	
	550	-	163	22,5	23,7	0,1211	
	560	-	168	22,8	24,4	0,1237	BFN
	600	13	188	23,8	25,4	0,1339	
	630	28	203	24,6	26,2	0,1415	
	650	38	213	25,2	26,8	0,1466	
	700	63	238	26,5	28,1	0,1594	
	710	68	243	26,6	28,2	0,1619	
	750	88	263	27,8	29,4	0,1721	
	800	113	288	29,2	30,8	0,1849	

Sizes in increments of 5 mm can be manufactured on request.

* *For designs with BKN a weight of 0.5 kg must be added.*

A x B [mm]		Damper blade overlaps a [mm]	Damper blade overlaps c [mm]	Weight Man. [kg]	Weight Actu. [kg]*	Free area S_f [m²]	Spring return actuator
280 x	900	163	338	31,8	35,2	0,2104	BF
	1000	213	388	34,5	37,9	0,2359	
300 x	180	-	-	12,9	14,1	0,0289	BFL
	200	-	-	13,5	14,7	0,0344	
	225	-	0,5	14,2	15,4	0,0413	
	250	-	13	14,9	16,1	0,0481	
	280	-	28	15,7	16,9	0,0564	
	300	-	38	16,3	17,5	0,0619	
	315	-	45,5	16,7	17,9	0,0660	
	355	-	65,5	17,7	18,9	0,0770	
	400	-	88	19,1	20,2	0,0894	
	450	-	113	20,4	21,5	0,1031	
	500	-	138	21,7	22,9	0,1169	
	550	-	163	23,1	24,6	0,1306	BFN
	560	-	168	23,4	25	0,1334	
	600	13	188	24,5	26,1	0,1444	
	630	28	203	25,2	26,8	0,1526	
	650	38	213	25,9	27,5	0,1581	
	700	63	238	27,2	28,8	0,1719	
	710	68	243	27,3	28,9	0,1746	
	750	88	263	28,5	30,1	0,1856	
	800	113	288	29,9	31,5	0,1994	
	900	163	338	32,5	35,9	0,2269	BF
	1000	213	388	35,2	38,6	0,2544	
315 x	180	-	-	13,2	14,4	0,0305	BFL
	200	-	-	13,8	15	0,0363	
	225	-	0,5	14,5	15,7	0,0435	
	250	-	13	15,3	16,4	0,0508	
	280	-	28	16,1	17,3	0,0595	
	300	-	38	16,6	17,8	0,0653	
	315	-	45,5	17,1	18,3	0,0696	
	355	-	65,5	18,1	19,3	0,0812	
	400	-	88	19,5	20,7	0,0943	
	450	-	113	20,8	22	0,1088	
	500	-	138	22,2	23,4	0,1233	
	550	-	163	23,6	25,2	0,1378	BFN
	560	-	168	23,9	25,5	0,1407	
	600	13	188	25	26,6	0,1523	
	630	28	203	25,8	27,4	0,1610	
	650	38	213	26,5	28,1	0,1668	
	700	63	238	27,8	29,4	0,1813	
	710	68	243	27,9	29,5	0,1842	
	750	88	263	29,2	30,8	0,1958	
	800	113	288	30,6	32,2	0,2103	
	900	163	338	33,2	36,6	0,2393	BF
	1000	213	388	36	39,4	0,2683	
355 x	180	-	-	14	15,2	0,0347	BFL
	200	-	-	14,6	15,8	0,0413	
	225	-	0,5	15,4	16,6	0,0495	
	250	-	13	16,2	17,4	0,0578	
	280	-	28	17	18,2	0,0677	
	300	-	38	17,6	18,8	0,0743	
	315	-	45,5	18,1	19,3	0,0792	
	355	-	65,5	19,2	20,4	0,0924	
	400	-	88	20,6	21,8	0,1073	
	450	-	113	22	23,2	0,1238	BFL
	500	-	138	23,5	25,1	0,1403	BFN
	550	-	163	24,9	26,5	0,1568	
	560	-	168	25,4	27	0,1601	
	600	13	188	26,5	28,1	0,1733	
	630	28	203	27,3	28,9	0,1832	
	650	38	213	28	29,6	0,1898	
	700	63	238	29,4	31	0,2063	
	710	68	243	29,6	31,2	0,2096	
	750	88	263	30,9	32,5	0,2228	
	800	113	288	32,4	35,8	0,2393	BF
	900	163	338	35,2	38,6	0,2723	
	1000	213	388	38,1	41,5	0,3053	
400 x	180	-	-	14,9	16,1	0,0394	BFL
	200	-	-	15,6	16,8	0,0469	
	225	-	0,5	16,4	17,6	0,0563	
	250	-	13	17,2	18,4	0,0656	
	280	-	28	18,2	19,3	0,0769	
	300	-	38	18,7	19,9	0,0844	
	315	-	45,5	19,2	20,4	0,0900	
	355	-	65,5	20,4	21,6	0,1050	
	400	-	88	21,9	23,1	0,1219	
	450	-	113	23,4	24,6	0,1406	
	500	-	138	24,9	26,5	0,1594	BFN
	550	-	163	26,5	28,1	0,1781	
	560	-	168	27	28,4	0,1819	
	600	13	188	28,2	29,8	0,1969	
	630	28	203	29,1	30,6	0,2081	
	650	38	213	29,8	31,2	0,2156	
	700	63	238	31,3	32,9	0,2344	
	710	68	243	31,5	33	0,2381	
	750	88	263	32,8	36	0,2531	BF
	800	113	288	34,4	37,6	0,2719	
	900	163	338	37,4	40,7	0,3094	
	1000	213	388	40,5	43,9	0,3469	
450 x	180	-	-	15,9	17,1	0,0446	BFL
	200	-	-	16,6	17,8	0,0531	
	225	-	0,5	17,5	18,7	0,0638	
	250	-	13	18,4	19,6	0,0744	
	280	-	28	19,4	20,6	0,0871	
	300	-	38	20	21,2	0,0956	
	315	-	45,5	20,5	21,7	0,1020	
	355	-	65,5	21,7	22,9	0,1190	
	400	-	88	23,3	24,5	0,1381	
	450	-	113	24,9	26,5	0,1594	BFN
	500	-	138	26,6	28,2	0,1806	
	550	-	163	28,2	29,8	0,2019	
	560	-	168	28,7	30,3	0,2061	
	600	13	188	30,1	31,7	0,2231	
	630	28	203	31	32,6	0,2359	
	650	38	213	31,8	33,4	0,2444	
	700	63	238	33,3	36,7	0,2656	BF
	710	68	243	33,5	36,9	0,2699	
	750	88	263	35	38,3	0,2869	
	800	113	288	36,7	40	0,3081	

Sizes in increments of 5 mm can be manufactured on request.

* *For designs with BKN a weight of 0.5 kg must be added.*

A x B [mm]		Damper blade overlaps a [mm]	Damper blade overlaps c [mm]	Weight Man. [kg]	Weight Actu. [kg]*	Free area S_f [m²]	Spring return actuator
450 x	900	163	338	39,8	43,2	0,3506	BF
	1000	213	388	43,1	46,5	0,3931	
500 x	180	-	-	16,9	18,1	0,0499	BFL
	200	-	-	17,6	18,8	0,0594	
	225	-	0,5	18,6	19,8	0,0713	
	250	-	13	19,5	20,7	0,0831	
	280	-	28	20,6	21,8	0,0974	
	300	-	38	21,3	22,5	0,1069	
	315	-	45,5	21,9	23	0,1140	
	355	-	65,5	23,2	24,4	0,1330	
	400	-	88	24,9	26,1	0,1544	
	450	-	113	26,7	28,3	0,1781	BFN
	500	-	138	28,4	30	0,2019	
	550	-	163	30,2	31,8	0,2256	
	560	-	168	30,6	32,2	0,2304	
	600	13	188	32	33,6	0,2494	
	630	28	203	33	34,6	0,2636	
	650	38	213	33,9	37,2	0,2731	BF
	700	63	238	35,6	38,9	0,2969	
	710	68	243	35,8	39,2	0,3016	
	750	88	263	37,4	40,7	0,3206	
	800	113	288	39,2	42,6	0,3444	
	900	163	338	42,6	46	0,3919	
	1000	213	388	46,2	49,6	0,4394	
550 x	180	-	-	17,9	19,1	0,0551	BFL
	200	-	-	18,7	19,9	0,0656	
	225	-	0,5	19,7	20,9	0,0788	
	250	-	13	20,7	21,9	0,0919	
	280	-	28	21,8	23	0,1076	
	300	-	38	22,5	23,7	0,1181	
	315	-	45,5	23,1	24,3	0,1260	
	355	-	65,5	24,6	25,8	0,1470	
	400	-	88	26,4	28	0,1706	BFN
	450	-	113	28,2	29,8	0,1969	
	500	-	138	30,1	31,7	0,2231	
	550	-	163	32	33,6	0,2494	
	560	-	168	32,3	33,9	0,2546	
	600	13	188	33,9	35,4	0,2756	
	630	28	203	34,9	38,3	0,2914	BF
	650	38	213	35,8	39,2	0,3019	
	700	63	238	37,6	41	0,3281	
	710	68	243	37,8	41,2	0,3334	
	750	88	263	39,5	42,9	0,3544	
	800	113	288	41,4	44,8	0,3806	
	900	163	338	45	48,4	0,4331	
	1000	213	388	48,8	52,2	0,4856	
560 x	180	-	-	18,1	19,3	0,0562	BFL
	200	-	-	18,9	20,1	0,0669	
	225	-	0,5	19,9	21,1	0,0803	
	250	-	13	20,9	22,1	0,0936	
	280	-	28	22,1	23,3	0,1097	
	300	-	38	22,8	24	0,1204	
	315	-	45,5	23,4	24,6	0,1284	
	355	-	65,5	24,8	26	0,1498	
	400	-	88	26,7	28,3	0,1739	BFN
	450	-	113	28,5	30,1	0,2006	BFN
	500	-	138	30,4	32	0,2274	
	550	-	163	32,3	33,9	0,2541	
	560	-	168	32,7	34,3	0,2595	
	600	13	188	34,2	35,8	0,2809	
	630	28	203	35,3	38,7	0,2969	BF
	650	38	213	36,2	39,5	0,3076	
	700	63	238	38	41,4	0,3344	
	710	68	243	38,2	41,6	0,3397	
	750	88	263	39,9	43,3	0,3611	
	800	113	288	41,8	45,2	0,3879	
	900	163	338	45,5	48,9	0,4414	
	1000	213	388	49,3	52,7	0,4949	
600 x	180	-	-	18,9	20,1	0,0604	BFL
	200	-	-	19,7	20,9	0,0719	
	225	-	0,5	20,8	22	0,0863	
	250	-	13	21,8	23	0,1006	
	280	-	28	23,1	24,3	0,1179	
	300	-	38	23,8	25	0,1294	
	315	-	45,5	24,4	25,6	0,1380	
	355	-	65,5	25,9	27,1	0,1610	
	400	-	88	27,8	29,4	0,1869	BFN
	450	-	113	29,7	31,3	0,2156	
	500	-	138	31,7	33,3	0,2444	
	550	-	163	33,7	35,3	0,2731	
	560	-	168	34,1	35,7	0,2789	
	600	13	188	35,7	39	0,3019	BF
	630	28	203	36,8	40,2	0,3191	
	650	38	213	37,7	41,1	0,3306	
	700	63	238	39,6	43	0,3594	
	710	68	243	39,9	43,2	0,3651	
	750	88	263	41,6	45	0,3881	
	800	113	288	43,6	47	0,4169	
	900	163	338	47,4	50,8	0,4744	
	1000	213	388	51,4	54,8	0,5319	
630 x	180	-	-	19,4	20,6	0,0635	BFL
	200	-	-	20,3	21,5	0,0756	
	225	-	0,5	21,4	22,6	0,0908	
	250	-	13	22,5	23,7	0,1059	
	280	-	28	23,7	24,9	0,1240	
	300	-	38	24,4	25,6	0,1361	
	315	-	45,5	25,1	26,3	0,1452	
	355	-	65,5	26,6	27,8	0,1694	
	400	-	88	28,6	30,2	0,1966	BFN
	450	-	113	30,6	32,2	0,2269	
	500	-	138	32,6	34,2	0,2571	
	550	-	163	34,6	36,2	0,2874	
	560	-	168	35	36,6	0,2934	
	600	13	188	36,7	40,1	0,3176	BF
	630	28	203	37,8	41,2	0,3358	
	650	38	213	38,8	42,1	0,3479	
	700	63	238	40,7	44,1	0,3781	
	710	68	243	41	44,4	0,3842	
	750	88	263	42,8	46,1	0,4084	
	800	113	288	44,8	48,2	0,4386	

Sizes in increments of 5 mm can be manufactured on request.

* *For designs with BKN a weight of 0.5 kg must be added.*

A x B [mm]		Damper blade overlaps a [mm]	Damper blade overlaps c [mm]	Weight Man. [kg]	Weight Actu. [kg]*	Free area S_f [m²]	Spring return actuator
630 x	900	163	338	48,8	52,2	0,4991	BF
	1000	213	388	52,9	56,3	0,5596	
650 x	180	-	-	19,9	21,1	0,0656	BFL
	200	-	-	20,8	22	0,0781	
	225	-	0,5	21,9	23,1	0,0938	
	250	-	13	23	24,2	0,1094	
	280	-	28	24,3	25,5	0,1281	
	300	-	38	25	26,2	0,1406	
	315	-	45,5	25,7	26,9	0,1500	
	355	-	65,5	27,3	28,5	0,1750	
	400	-	88	29,2	30,8	0,2031	BFN
	450	-	113	31,3	32,9	0,2344	
	500	-	138	33,3	34,9	0,2656	
	550	-	163	35,4	37	0,2969	
	560	-	168	35,8	39,2	0,3031	BF
	600	13	188	37,5	40,9	0,3281	
	630	28	203	38,7	42	0,3469	
	650	38	213	39,6	43	0,3594	
	700	63	238	41,6	45	0,3906	
	710	68	243	41,9	45,3	0,3969	
	750	88	263	43,7	47,1	0,4219	
	800	113	288	45,8	49,2	0,4531	
	900	163	338	49,8	53,2	0,5156	
	1000	213	388	54	57,4	0,5781	
700 x	180	-	-	20,8	22	0,0709	BFL
	200	-	-	21,8	23	0,0844	
	225	-	0,5	23	24,2	0,1013	
	250	-	13	24,2	25,4	0,1181	
	280	-	28	25,5	26,7	0,1384	
	300	-	38	26,3	27,4	0,1519	
	315	-	45,5	26,9	28,1	0,1620	
	355	-	65,5	28,6	30,2	0,1890	BFN
	400	-	88	30,7	32,3	0,2194	
	450	-	113	32,8	34,4	0,2531	
	500	-	138	35	36,5	0,2869	
	550	-	163	37,1	40,5	0,3206	BF
	560	-	168	37,6	40,9	0,3274	
	600	13	188	39,3	42,7	0,3544	
	630	28	203	40,5	43,9	0,3746	
	650	38	213	41,5	44,9	0,3881	
	700	63	238	43,6	47	0,4219	
	710	68	243	43,9	47,3	0,4286	
	750	88	263	45,8	49,2	0,4556	
	800	113	288	48	51,4	0,4894	
	900	163	338	52,2	55,6	0,5569	
	1000	213	388	56,6	60	0,6244	
710 x	180	-	-	21	22,2	0,0719	BFL
	200	-	-	22	23,2	0,0856	
	225	-	0,5	23,2	24,4	0,1028	
	250	-	13	24,4	25,6	0,1199	
	280	-	28	25,8	27	0,1404	
	300	-	38	26,5	27,7	0,1541	
	315	-	45,5	27,2	28,4	0,1644	
	355	-	65,5	28,9	30,5	0,1918	BFN
	400	-	88	31	32,6	0,2226	
710 x	450	-	113	33,1	34,7	0,2569	BFN
	500	-	138	35,3	36,9	0,2911	
	550	-	163	37,5	40,8	0,3254	BF
	560	-	168	37,9	41,3	0,3322	
	600	13	188	39,7	43	0,3596	
	630	28	203	40,9	44,3	0,3802	
	650	38	213	41,9	45,3	0,3939	
	700	63	238	44	47,4	0,4281	
	710	68	243	44,3	47,7	0,4350	
	750	88	263	46,2	49,6	0,4624	
	800	113	288	48,4	51,8	0,4966	
	900	163	338	52,7	56,1	0,5651	
	1000	213	388	57,1	60,5	0,6336	
750 x	180	-	-	21,8	23	0,0761	BFL
	200	-	-	22,8	24	0,0906	
	225	-	0,5	24,1	25,3	0,1088	
	250	-	13	25,3	26,5	0,1269	
	280	-	28	26,7	27,9	0,1486	
	300	-	38	27,5	28,7	0,1631	
	315	-	45,5	28,2	29,4	0,1740	
	355	-	65,5	29,9	31,5	0,2030	BFN
	400	-	88	32,1	33,7	0,2356	
	450	-	113	34,3	35,9	0,2719	
	500	-	138	36,6	38,2	0,3081	
	550	-	163	38,8	42,2	0,3444	BF
	560	-	168	39,3	42,7	0,3516	
	600	13	188	41,1	44,5	0,3806	
	630	28	203	42,4	45,8	0,4024	
	650	38	213	43,4	46,8	0,4169	
	700	63	238	45,6	49	0,4531	
	710	68	243	45,9	49,3	0,4604	
	750	88	263	47,9	51,3	0,4894	
	800	113	288	50,2	53,6	0,5256	
	900	163	338	54,6	58	0,5981	
	1000	213	388	59,1	62,5	0,6706	
800 x	180	-	-	22,8	24	0,0814	BFL
	200	-	-	23,9	25,1	0,0969	
	225	-	0,5	25,2	26,4	0,1163	
	250	-	13	26,5	27,7	0,1356	
	280	-	28	28	29,2	0,1589	
	300	-	38	28,7	29,9	0,1744	
	315	-	45,5	29,5	30,7	0,1860	
	355	-	65,5	31,3	32,9	0,2170	BFN
	400	-	88	33,5	35,1	0,2519	
	450	-	113	35,8	37,4	0,2906	
	500	-	138	38,2	39,8	0,3294	
	550	-	163	40,6	43,9	0,3681	BF
	560	-	168	41	44,4	0,3759	
	600	13	188	42,9	46,3	0,4069	
	630	28	203	44,3	47,7	0,4301	
	650	38	213	45,3	48,7	0,4456	
	700	63	238	47,6	51	0,4844	
	710	68	243	48	51,4	0,4921	
	750	88	263	50	53,4	0,5231	
	800	113	288	52,4	55,8	0,5619	

Sizes in increments of 5 mm can be manufactured on request.

* *For designs with BKN a weight of 0.5 kg must be added.*

A x B [mm]		Damper blade overlaps a [mm]	Damper blade overlaps c [mm]	Weight Man. [kg]	Weight Actu. [kg]*	Free area S_f [m²]	Spring return actuator
800 x	900	163	338	57	60,4	0,6394	BF
	1000	213	388	61,7	65,1	0,7169	
900 x	180	-	-	24,8	26	0,0919	BFL
	200	-	-	25,9	27,1	0,1094	
	225	-	0,5	27,4	28,6	0,1313	
	250	-	13	28,8	30	0,1531	
	280	-	28	30,4	31,6	0,1794	
	300	-	38	31,2	32,4	0,1969	
	315	-	45,5	32	33,6	0,2100	BFN
	355	-	65,5	34	35,6	0,2450	
	400	-	88	36,4	38	0,2844	
	450	-	113	38,9	40,5	0,3281	
	500	-	138	41,4	44,8	0,3719	BF
	550	-	163	44	47,4	0,4156	
	560	-	168	44,5	47,9	0,4244	
	600	13	188	46,6	49,9	0,4594	
	630	28	203	48	51,4	0,4856	
	650	38	213	49,2	52,6	0,5031	
	700	63	238	51,6	55	0,5469	
	710	68	243	52	55,4	0,5556	
	750	88	263	54,2	57,6	0,5906	
	800	113	288	56,8	60,2	0,6344	
	900	163	338	61,8	65,2	0,7219	
	1000	213	388	66,9	70,3	0,8094	
1000 x	180	-	-	26,8	28	0,1024	BFL
	200	-	-	28	29,2	0,1219	
	225	-	0,5	29,6	30,7	0,1463	
	250	-	13	31,1	32,3	0,1706	
	280	-	28	32,9	34,1	0,1999	
	300	-	38	33,7	35,3	0,2194	BFN
	315	-	45,5	34,5	36,1	0,2340	
	355	-	65,5	36,7	38,3	0,2730	
	400	-	88	39,3	40,8	0,3169	
	450	-	113	41,9	43,5	0,3656	
	500	-	138	44,7	48,1	0,4144	BF
	550	-	163	47,4	50,8	0,4631	
	560	-	168	48	51,4	0,4729	
	600	13	188	50,2	53,6	0,5119	
	630	28	203	51,8	55,1	0,5411	
	650	38	213	53	56,4	0,5606	
	700	63	238	55,6	59	0,6094	
	710	68	243	56,1	59,5	0,6191	
	750	88	263	58,4	61,8	0,6581	
	800	113	288	61,2	64,6	0,7069	
	900	163	338	66,6	69,9	0,8044	
	1000	213	388	72,1	75,5	0,9019	
1100 x	180	-	-	28,8	29,9	0,1129	BFL
	200	-	-	30,1	31,3	0,1344	
	225	-	0,5	31,8	33	0,1613	
	250	-	13	33,4	34,6	0,1881	
	280	-	28	35,4	36,5	0,2204	
	300	-	38	36,2	37,8	0,2419	BFN
	315	-	45,5	37,1	38,7	0,2580	
	355	-	65,5	39,4	41	0,3010	
	400	-	88	42,1	43,7	0,3494	
1100 x	450	-	113	45	48,4	0,4031	BF
	500	-	138	47,9	51,3	0,4569	
	550	-	163	50,9	54,3	0,5106	
	560	-	168	51,5	54,9	0,5214	
	600	13	188	53,8	57,2	0,5644	
	630	28	203	55,5	58,9	0,5966	
	650	38	213	56,8	60,2	0,6181	
	700	63	238	59,7	63	0,6719	
	710	68	243	60,1	63,5	0,6826	
	750	88	263	62,6	66	0,7256	
	800	113	288	65,6	69	0,7794	
	900	163	338	71,3	74,7	0,8869	
	1000	213	388	77,2	80,6	0,9944	
1250 x	180	-	-	31,7	32,9	0,1286	BFL
	200	-	-	33,2	34,4	0,1531	
	225	-	0,5	35	36,2	0,1838	
	250	-	13	36,9	38,5	0,2144	
	280	-	28	39	40,6	0,2511	BFN
	300	-	38	39,9	41,5	0,2756	
	315	-	45,5	40,9	42,5	0,2940	
	355	-	65,5	43,4	45	0,3430	
	400	-	88	46,4	48	0,3981	
	450	-	113	49,6	53	0,4594	BF
	500	-	138	52,8	56,2	0,5206	
	550	-	163	56	59,4	0,5819	
	560	-	168	56,7	60,1	0,5941	
	600	13	188	59,3	62,7	0,6431	
	630	28	203	61,1	64,5	0,6799	
	650	38	213	62,5	65,9	0,7044	
	700	63	238	65,7	69,1	0,7656	
	710	68	243	66,2	69,6	0,7779	
	750	88	263	68,9	72,3	0,8269	
	800	113	288	72,2	75,6	0,8881	
	900**	163	338	80,3	81,9	1,0106	
	1000**	213	388	86,7	88,4	1,1331	
1400 x	180	-	-	34,7	35,9	0,1444	BFL
	200	-	-	36,3	37,5	0,1719	
	225	-	0,5	38,3	39,5	0,2063	
	250	-	13	40,3	41,9	0,2406	BFN
	280	-	28	42,7	44,3	0,2819	
	300	-	38	43,6	45,2	0,3094	
	315	-	45,5	44,7	46,3	0,3300	
	355	-	65,5	47,4	49	0,3850	
	400	-	88	50,7	54,1	0,4469	BF
	450	-	113	54,2	57,6	0,5156	
	500	-	138	57,7	61,1	0,5844	
	550	-	163	61,2	64,6	0,6531	
	560	-	168	61,9	65,3	0,6669	
	600	13	188	64,7	68,1	0,7219	
	630**	28	203	68,5	70,1	0,7631	
	650**	38	213	70	71,7	0,7906	
	700**	63	238	73,5	75,1	0,8594	
	710**	68	243	74	75,7	0,8731	
	750**	88	263	77	78,6	0,9281	
	800**	113	288	80,5	82,2	0,9969	

Sizes in increments of 5 mm can be manufactured on request.

* *For designs with BKN a weight of 0.5 kg must be added.*

A x B [mm]		Damper blade overlaps a [mm]	Damper blade overlaps c [mm]	Weight Man. [kg]	Weight Actu. [kg]*	Free area S_f [m²]	Spring return actuator
1400 x	900**	163	338	87,4	89,1	1,1344	BF
	1000**	213	388	94,5	96,1	1,2719	
1500 x	180	-	-	36,6	37,8	0,1549	BFL
	200	-	-	38,4	39,6	0,1844	
	225	-	0,5	40,5	41,7	0,2213	
	250	-	13	42,7	44,2	0,2581	BFN
	280	-	28	45,2	46,8	0,3024	
	300	-	38	46,1	47,7	0,3319	
	315	-	45,5	47,2	48,8	0,3540	
	355	-	65,5	50,1	51,7	0,4130	
	400	-	88	53,6	57	0,4794	BF
	450	-	113	57,2	60,6	0,5531	
	500	-	138	60,9	64,3	0,6269	
	550	-	163	64,6	68	0,7006	
	560	-	168	65,4	68,8	0,7154	
	600	13	188	68,3	71,7	0,7744	
	630**	28	203	72,2	73,9	0,8186	
	650**	38	213	73,8	75,5	0,8481	
	700**	63	238	77,5	79,1	0,9219	
	710**	68	243	78,1	79,7	0,9366	
	750**	88	263	81,2	82,8	0,9956	
	800**	113	288	84,9	86,6	1,0694	
	900**	163	338	92,2	93,9	1,2169	

A x B [mm]		Damper blade overlaps a [mm]	Damper blade overlaps c [mm]	Weight Man. [kg]	Weight Actu. [kg]*	Free area S_f [m²]	Spring return actuator
1500 x	1000**	213	388	99,6	101,3	1,3644	BF
1600 x	180	-	-	38,4	39,6	0,1654	BFL
	200	-	-	40,2	41,4	0,1969	
	225	-	0,5	42,5	43,7	0,2363	
	250	-	13	44,7	46,3	0,2756	BFN
	280	-	28	47,4	49	0,3229	
	300	-	38	48,3	49,9	0,3544	
	315	-	45,5	49,5	51,1	0,3780	
	355	-	66	52,6	54,2	0,4410	
	400	-	88	56,2	59,6	0,5119	BF
	450	-	113	60,1	63,4	0,5906	
	500	-	138	64	67,3	0,6694	
	550	-	163	67,8	71,2	0,7481	
	560	-	168	68,6	72	0,7639	
	600	13	188	71,8	75,1	0,8269	
	630**	28	203	75,8	77,4	0,8741	
	650**	38	213	77,4	79,1	0,9056	
	700**	63	238	81,2	82,9	0,9844	
	710**	68	243	81,9	83,6	1,0001	
	750**	88	263	85,2	86,8	1,0631	
	800**	113	288	89,1	90,7	1,1419	
	900**	163	338	96,8	98,4	1,2994	
	1000**	213	388	104,6	106,2	1,4569	

Sizes in increments of 5 mm can be manufactured on request.

** For designs with BKN a weight of 0.5 kg must be added.*

*** Two closing springs are used for these dimensions.*

IV. INSTALLATION

Placement and installation

- The fire dampers are suitable for installation in position with horizontal blade axis in vertical and horizontal passages of fire separating constructions. The damper installation procedures must be done so that all load transfer from the fire separating constructions to the damper is absolutely excluded. Following air-conditioning duct must be suspended or supported so that all load transfer from the following duct to the fire damper is absolutely excluded. The gap between the installed damper and the fire separating construction must be perfectly filled with approved material.
- The damper must be installed so that the damper blade (in closed position) is situated in the fire separating construction
  - marked by the label BUILT-IN EDGE on the damper casing.
- During the installation and plastering process, the actuating mechanism must be protected (covered) against damage and pollution. The damper casing should not be deformed during bricking in. Once the damper is built in, the damper blade should not grind against the damper casing during opening or closing.
- The distance between the fire damper and the construction (wall, ceiling) must be 75 mm at the minimum, according to EN 1366-2. If two or more dampers are to be installed in one fire separating construction, the distance between adjacent dampers must be 200 mm at the minimum, according to EN 1366-2.

Minimum distance between the fire dampers and the construction

- minimum distance 200 mm between dampers, according to EN 1366-2
- minimum distance 75 mm between damper and construction (wall/ceiling), according to EN 1366-2
- recommended minimum distance 150 mm necessary for access to the actuator
- recommended minimum distance 250 mm necessary for access to the manual control and electrical components

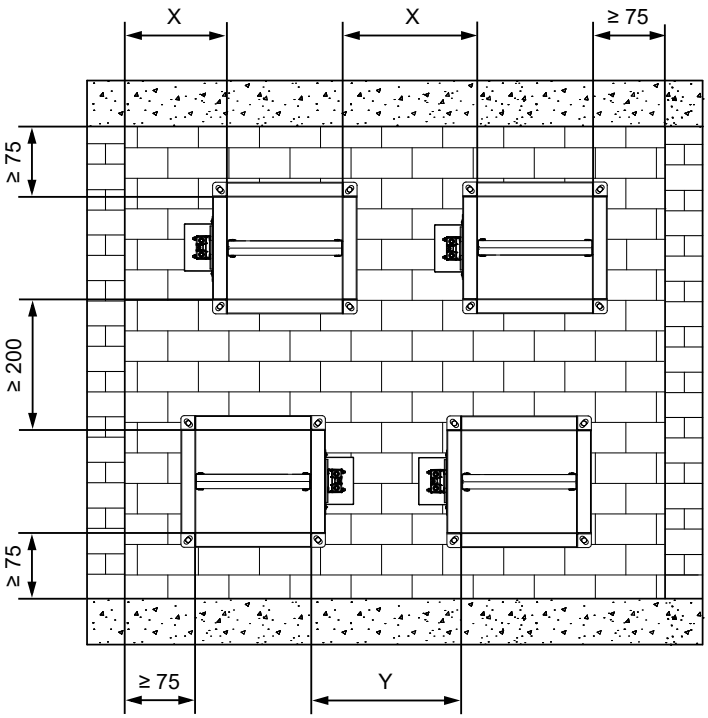

X = recommended min. distance for actuator ≥ 400 mm
X = recommended min. distance for manual control and electrical components ≥ 400 mm

Y = recommended min. distance for actuator ≥ 500 mm
Y = recommended min. distance for manual control and electrical components ≥ 500 mm

Built in edge

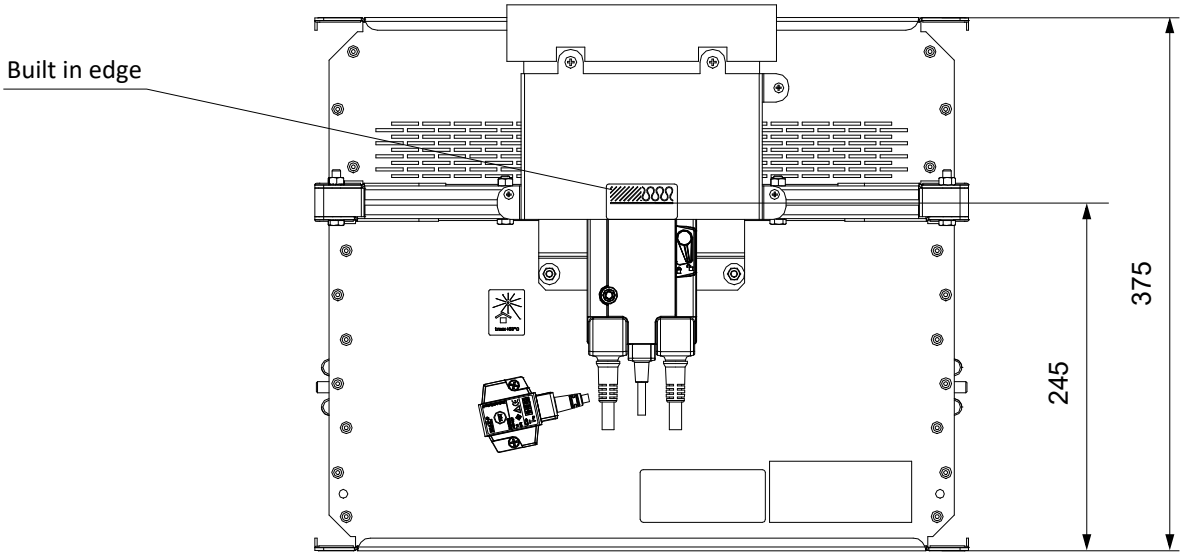

Dimensions of an installation opening

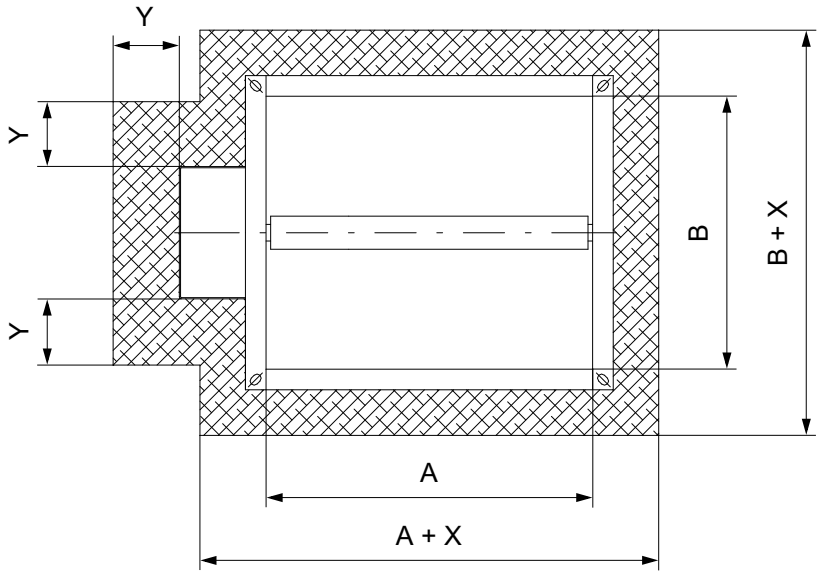

Mortar or gypsum

X = A(B)+100

Y = 50

Dimensions of an installation opening with two springs

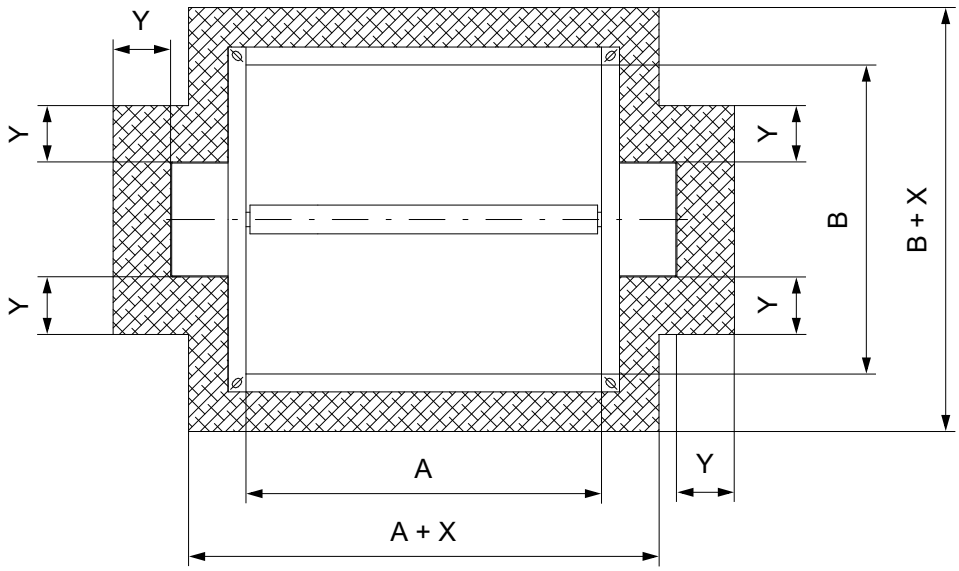

Statement of installations

Fire separating construction, location of the damper	Installation type, installation system	Gap width [mm]	Fire resistance	Page
Standard low- and high-density rigid wall construction according to EN 1363-1 ● damper in the wall ● 100 mm min. wall thickness	Mortar or gypsum	50-150	EI 120 (v_e) S [H]	24
Standard flexible wall construction min. EI 90 according to EN 1363-1. ● damper in the wall ● 100 mm min. wall thickness	Mortar or gypsum	50-150	EI 120 (v_e) S [H]	25
Standard low- and high-density rigid floor construction according to EN 1366-2 ● damper in the ceiling ● 150 mm min. ceiling thickness	Mortar or gypsum	50-150	EI 120 (h_o) S [H]	26

In solid wall construction

In solid wall construction - mortar or gypsum

EI 120 (v_e) S [H]

- Standard low- and high-density rigid wall construction according to EN 1363-1
- For connection of following duct → see page 30

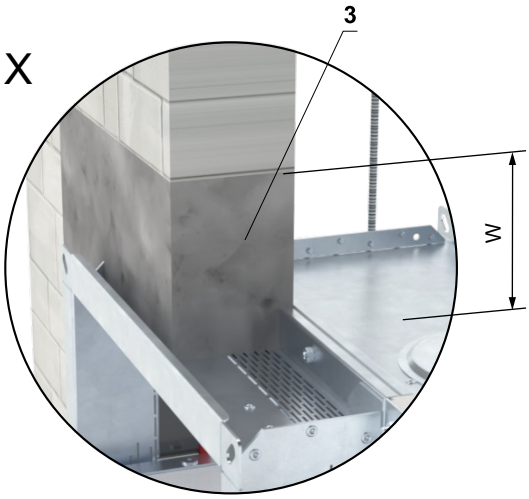

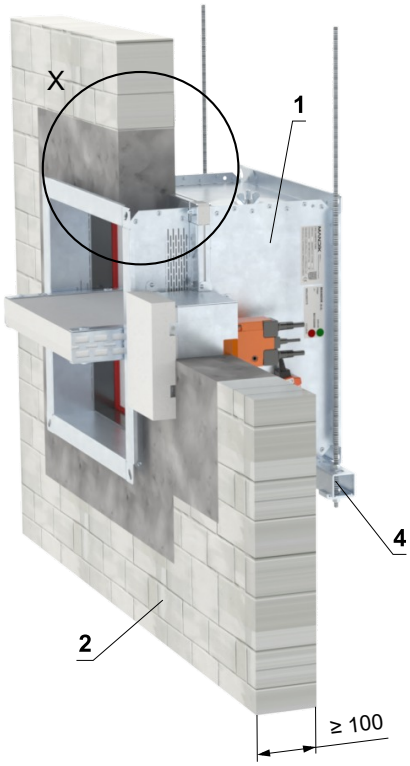

W = 50 - 150 mm

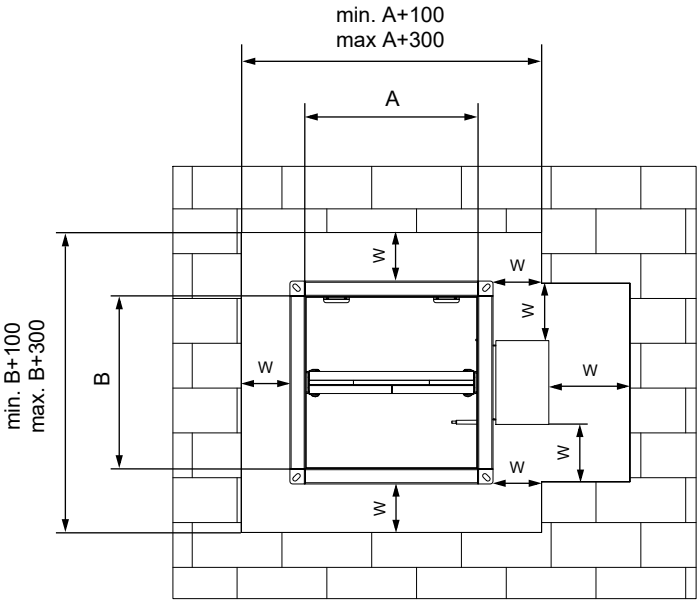

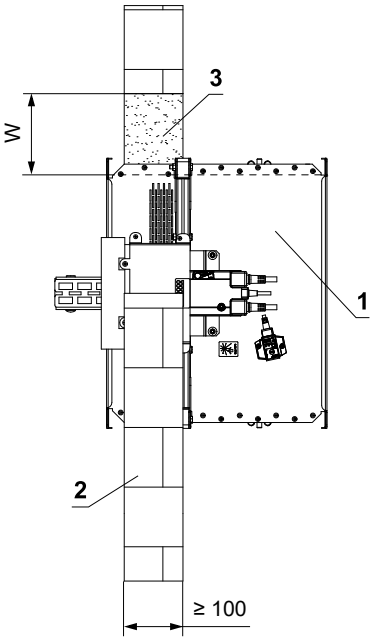

1 FDMA 120
2 Solid wall construction
3 Mortar or gypsum
4 Profile with threaded rod → see pages 27 to 29

In gypsum wall construction

In gypsum wall construction min. EI 90 - mortar or gypsum

EI 120 (v_e) S [H]

- Standard flexible wall construction min. EI 90 according to EN 1363-1.
- For connection of following duct → see page 30
- The installation opening is lined with a UW/CW profile.

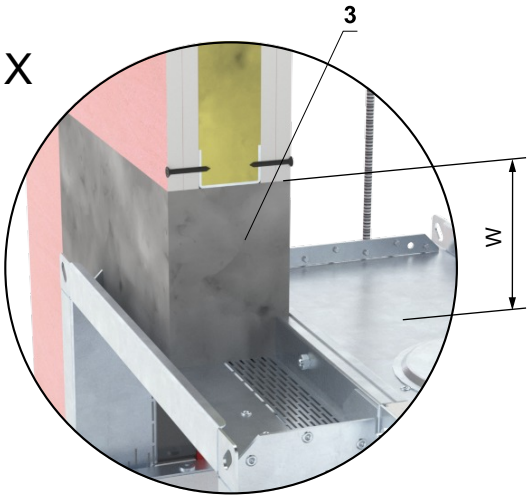

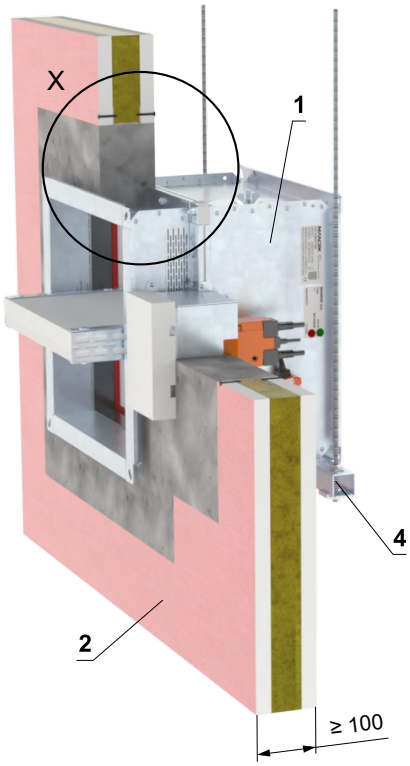

W = 50 - 150 mm

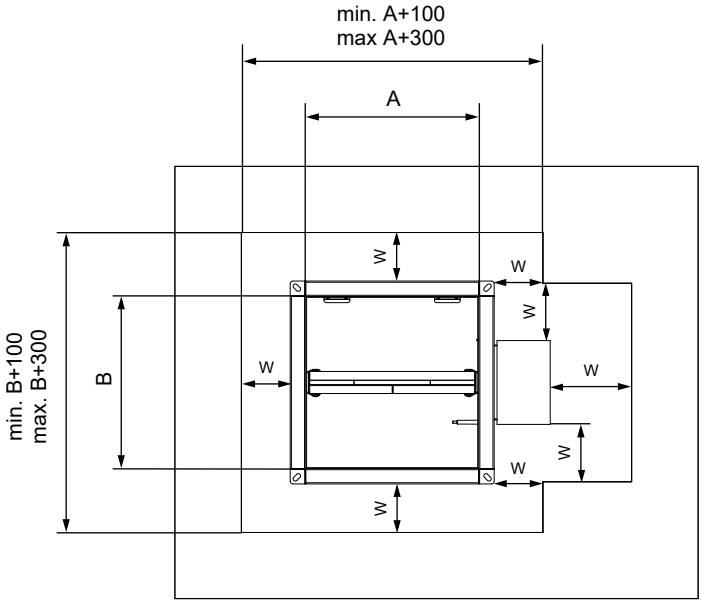

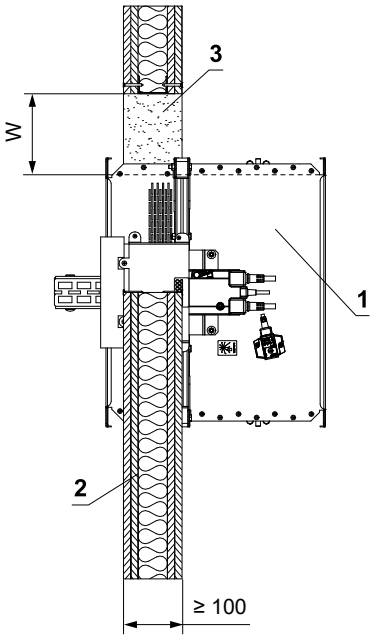

1 FDMA 120
2 Gypsum wall construction
3 Mortar or gypsum
4 Profile with threaded rod → see pages 27 to 29

In solid ceiling construction

In solid ceiling construction - mortar or gypsum

EI 120 (h_o) S [H]

- Standard low- and high-density rigid floor construction according to EN 1366-2
- For connection of following duct → see page 30
- The damper can be installed from both sides of the construction, i.e. From the top or the bottom side of the ceiling.

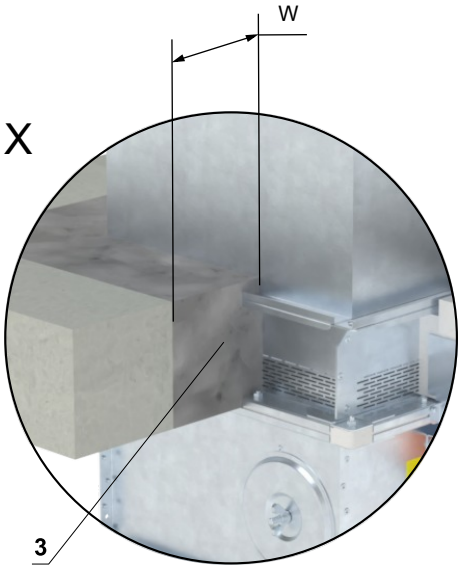

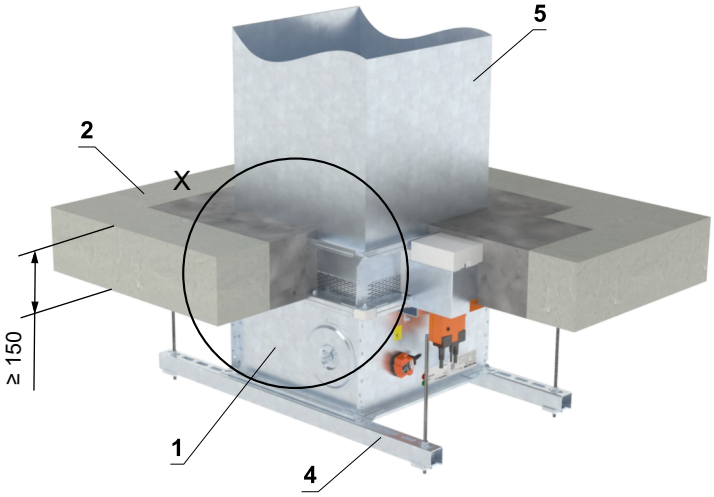

W = 50 - 150 mm

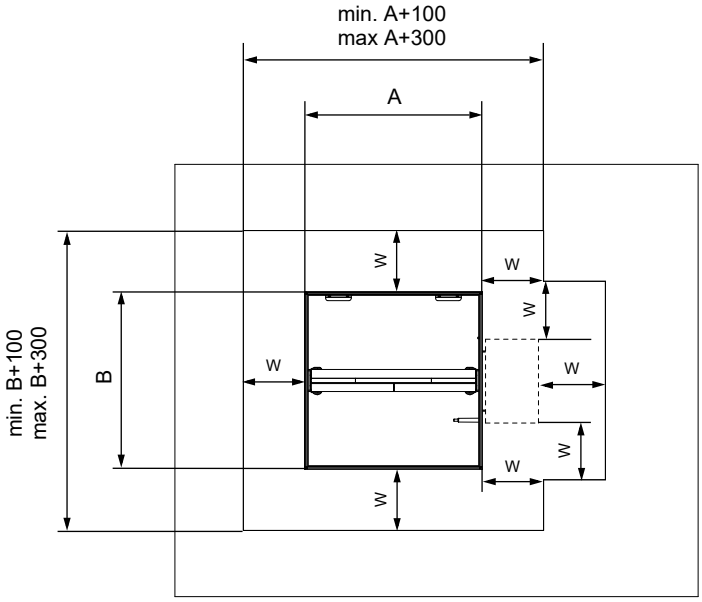

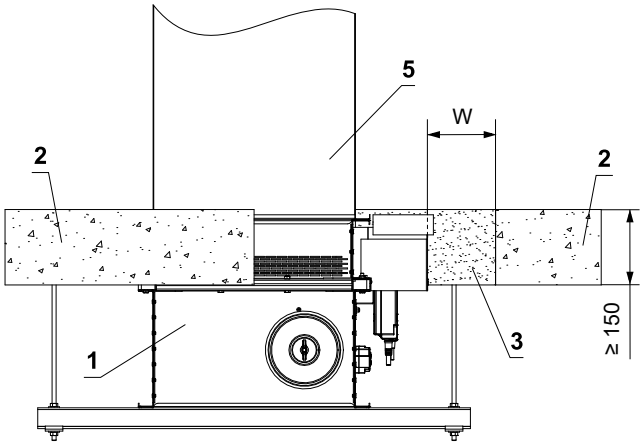

1 FDMA 120
2 Solid ceiling construction
3 Mortar or gypsum
4 Profile with threaded rod → see pages 27 to 29
5 Duct

V. SUSPENSION SYSTEMS

Mounting to the ceiling wall

- The dampers must be suspended using threaded rods and mounting profiles. Their dimensioning depend on the weight of the damper.
- The dampers and the duct must be suspended separately.
- Following air-conditioning duct must be suspended or supported so that all load transfer from the following duct to the damper flanges is absolutely excluded. Adjacent duct must be suspended or supported, as required by the duct suppliers.

Examples of anchoring to the ceiling construction
Follow the instructions of fixing specialist or installation company

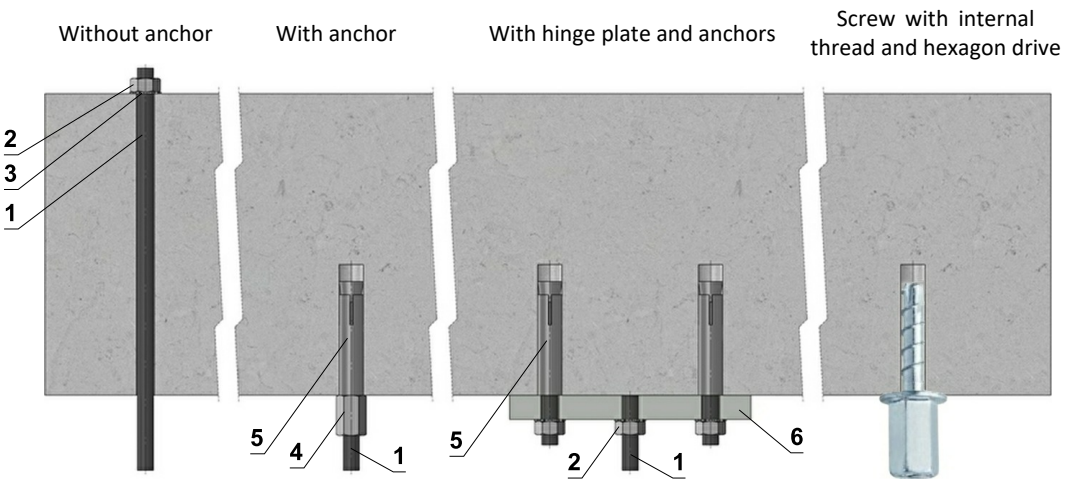

Hinge plates

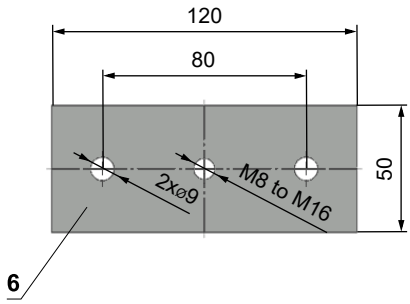

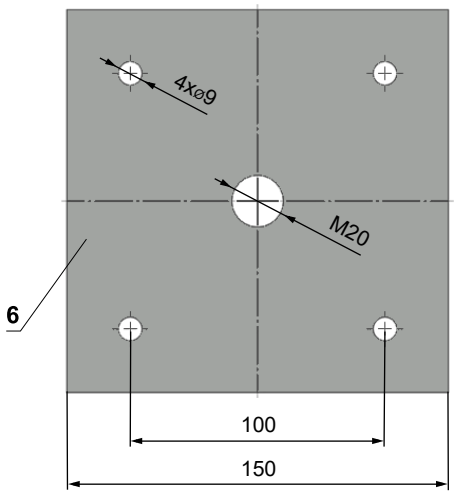

- If in doubt, always consult an anchor specialist engineer such as Halfen or Hilti.

1 Threaded rod M8 - M20
2 Nut M8 - M20
3 Washer for M8 - M20
4 Coupling Nut M8 - M20
5 Anchor
6 Hinge plate - min. thickness 10 mm
7 Concrete screw tested for fire resistance R30-R90, max. Tension up to 0.75 KN (length 35 mm)

Load capacities of threaded rods at the required fire resistance 60 min. < t ≤ 120 min.

Size	As [mm²]	Weight [kg]	
		for 1 rod	for 2 rods
M8	36,6	22	44
M10	58	35	70
M12	84,3	52	104
M16	157	96	192
M18	192	117	234
M20	245	150	300

Example of placing of mounting profiles HILTI

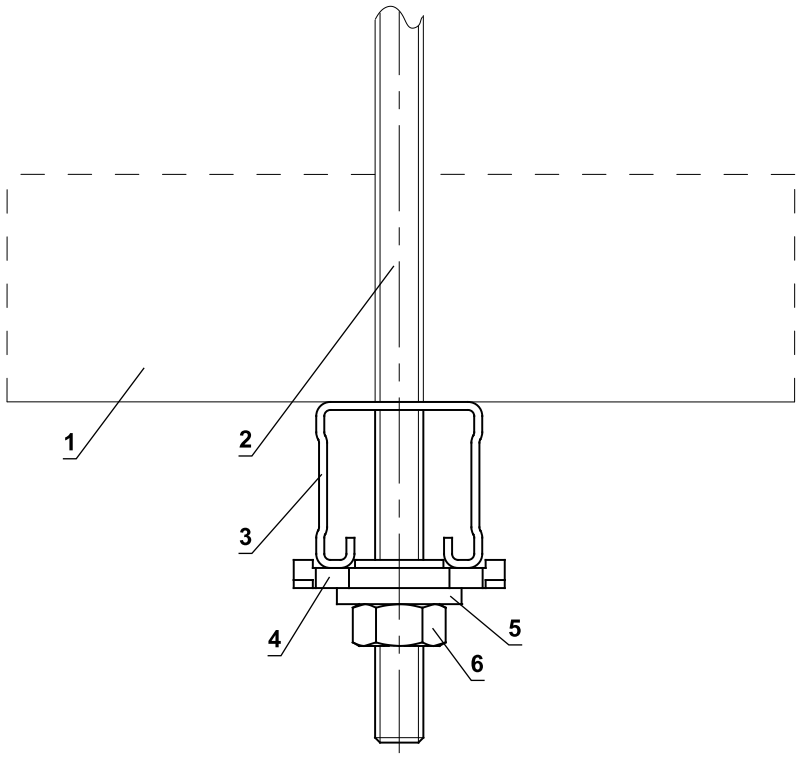

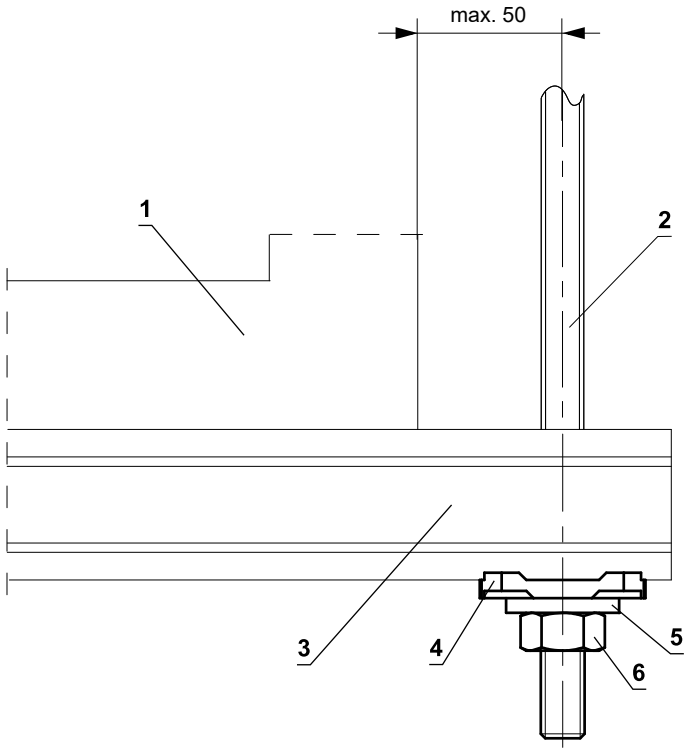

1 FDMA 120
2 Threaded rod M8 - M12
3 Support HILTI MQ-41 or MQ-41/3
4 Bored plate HILTI MQZ-L
5 Washer for M8 - M12
6 Nut M8 - M12

Example of fixing FDMA 120 to the wall/ceiling

In solid wall construction

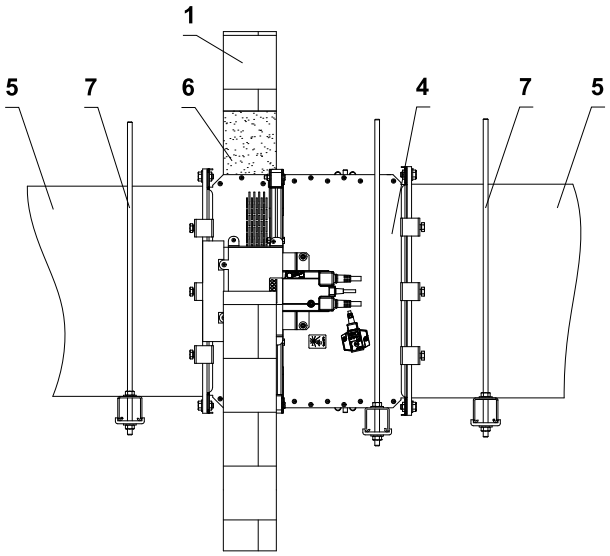

In gypsum wall construction

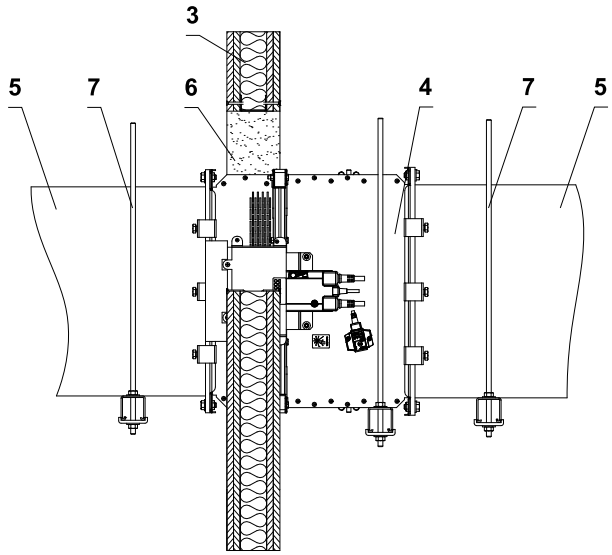

In solid ceiling construction

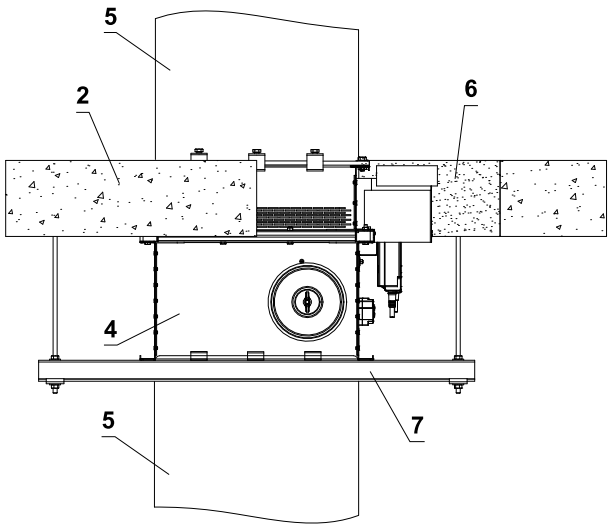

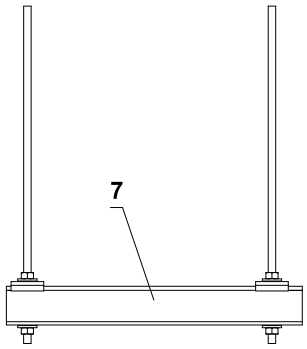

1 Solid wall construction
2 Solid ceiling construction
3 Gypsum wall construction
4 FDMA 120
5 Duct
6 Penetration
7 Profile with threaded rod→ see page 28

- The method of attachment must follow the minimum requirements for attachment and connection of ductwork in accordance with national regulations. Also, the elements can be suspended from the top, or supported from bottom, or fastened from the side.

Example of duct connection

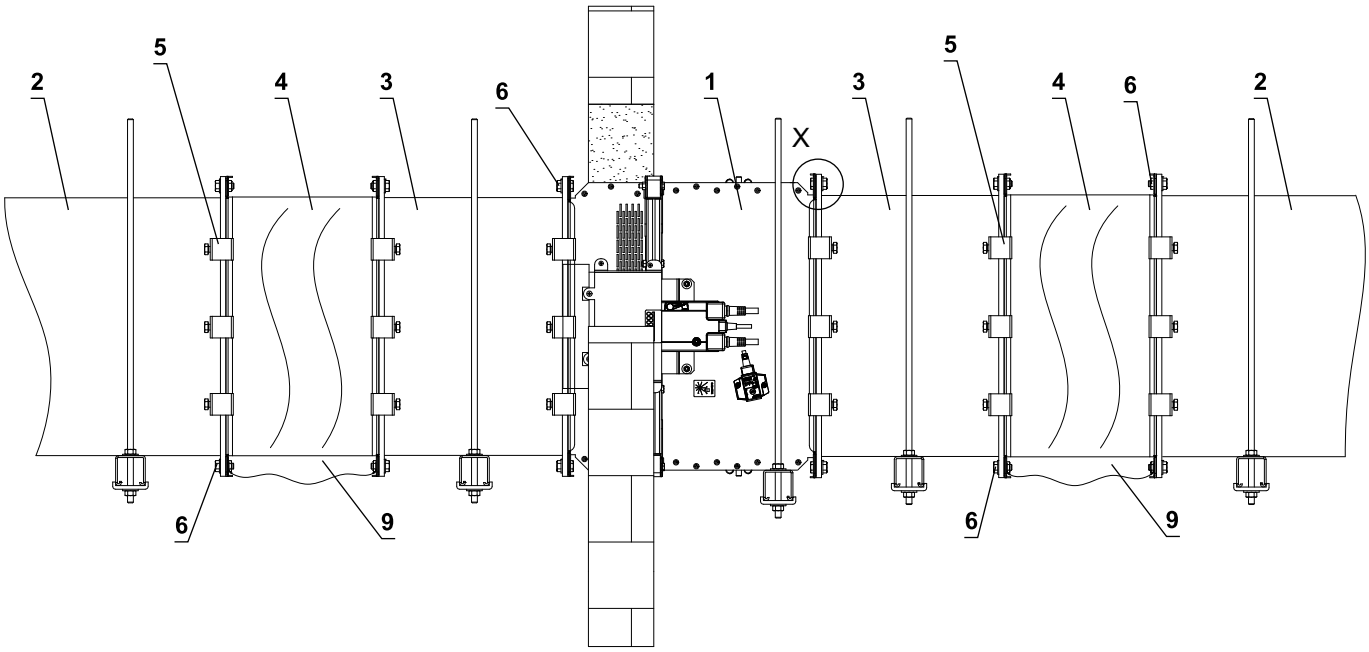

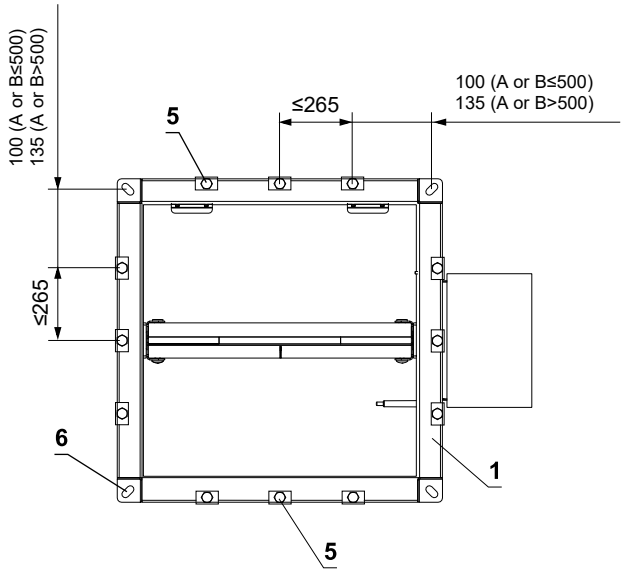

Electrically conductive connection

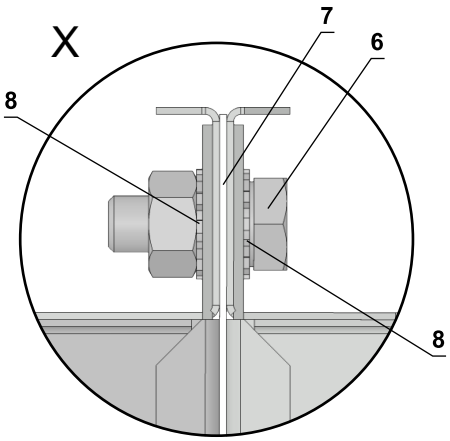

* at least one connection must be electrically conductive

1 FDMA 120
2 Duct
3 Extension piece (if required)
4 Damping pad
5 Steel clamp min. screw M8
6 Screw assembly M8 (screw M8x20 mm, 2 pcs toothed lock washer M8, nut M8) *
7 Sealing
8 Toothed lock washer M8
9 Protective bonding conductor

VI. TECHNICAL DATA

Pressure loss

Pressure loss calculation

$$\Delta p = \xi \cdot \rho \cdot \frac{w^2}{2}$$

Δp	[Pa]	pressure loss
w	[m/s]	air flow speed in nominal damper section
ρ	[kg/m³]	air density
ξ	[-]	coefficient of local pressure loss for the nominal damper section → see page 32

Determination of pressure loss by using diagram ρ = 1,2 kg/m³

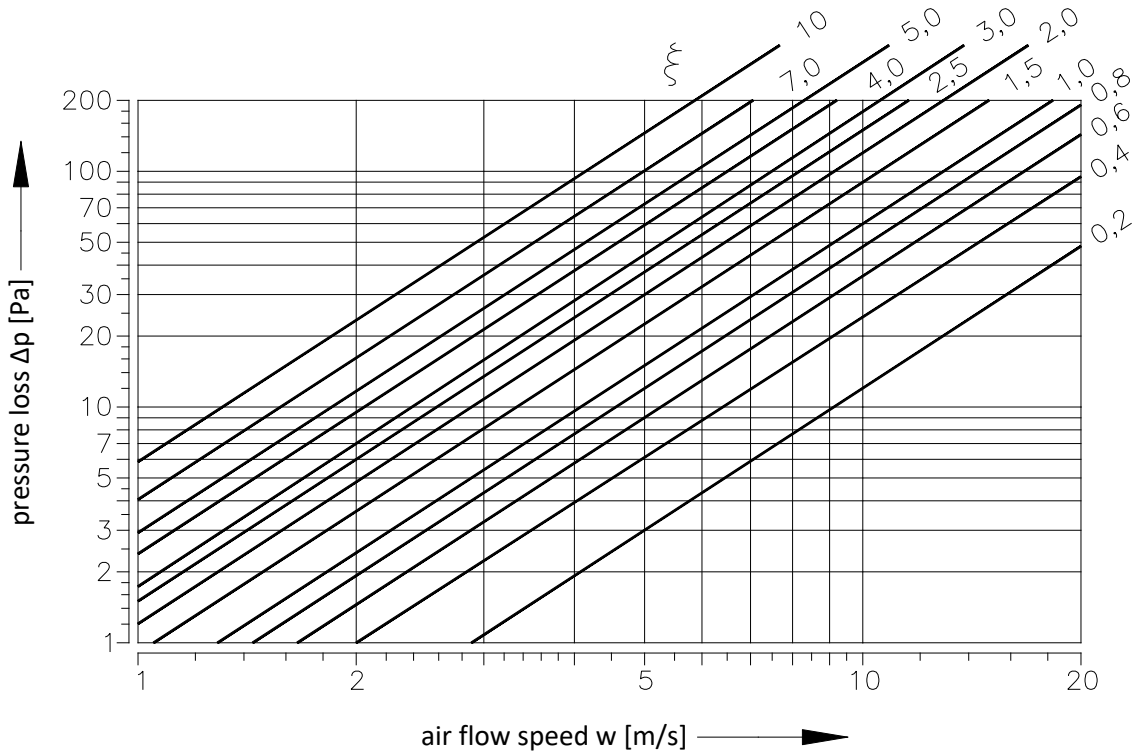

Coefficient of local pressure loss

	B										
A	**180**	**200**	**225**	**250**	**280**	**300**	**315**	**355**	**400**	**450**	**500**
180	2,389	1,843	1,465	1,164	1,032	0,947	0,803	0,684	0,596	0,527	0,478
200	2,236	1,723	1,321	1,083	1,002	0,896	0,749	0,638	0,555	0,490	0,443
225	2,153	1,653	1,197	1,044	0,960	0,861	0,724	0,609	0,529	0,470	0,426
250	2,064	1,590	1,173	1,008	0,926	0,823	0,693	0,585	0,509	0,452	0,413
280	1,962	1,502	1,141	0,952	0,881	0,775	0,658	0,556	0,481	0,430	0,387
300	1,889	1,451	1,106	0,902	0,827	0,729	0,618	0,528	0,463	0,405	0,369
315	1,802	1,383	1,067	0,867	0,781	0,677	0,595	0,506	0,439	0,387	0,350
355	1,727	1,325	1,015	0,828	0,728	0,648	0,569	0,483	0,420	0,370	0,334
400	1,664	1,276	0,964	0,799	0,705	0,635	0,546	0,464	0,402	0,355	0,321
450	1,610	1,235	0,948	0,772	0,685	0,601	0,527	0,448	0,389	0,343	0,310
500	1,569	1,201	0,917	0,752	0,673	0,592	0,513	0,436	0,377	0,332	0,301
550	1,547	1,186	0,891	0,739	0,665	0,587	0,503	0,428	0,371	0,330	0,298
560	1,529	1,172	0,881	0,732	0,650	0,584	0,499	0,424	0,367	0,324	0,293
600	1,513	1,154	0,874	0,725	0,645	0,569	0,493	0,419	0,363	0,319	0,288
630	1,495	1,144	0,861	0,714	0,641	0,554	0,487	0,414	0,358	0,315	0,285
650	1,480	1,131	0,841	0,705	0,617	0,550	0,481	0,408	0,352	0,311	0,284
700	1,469	1,123	0,833	0,704	0,612	0,549	0,479	0,405	0,351	0,310	0,281
710	1,462	1,120	0,824	0,698	0,606	0,548	0,476	0,404	0,350	0,309	0,279
750	1,449	1,109	0,817	0,693	0,601	0,541	0,470	0,399	0,345	0,306	0,276
800	1,436	1,099	0,810	0,685	0,593	0,532	0,467	0,397	0,343	0,301	0,273
900	1,412	1,080	0,795	0,673	0,585	0,524	0,459	0,389	0,336	0,296	0,268
1000	1,394	1,066	0,785	0,665	0,576	0,507	0,452	0,384	0,331	0,293	0,264
1100	1,377	1,053	0,775	0,656	0,563	0,496	0,447	0,379	0,327	0,289	0,261
1250	1,363	1,040	0,758	0,648	0,549	0,490	0,442	0,374	0,324	0,286	0,258
1400	1,348	1,031	0,744	0,641	0,540	0,488	0,436	0,370	0,321	0,281	0,256
1500	1,340	1,024	0,740	0,638	0,530	0,480	0,434	0,368	0,318	0,280	0,254
1600	1,327	1,016	0,729	0,633	0,521	0,476	0,430	0,364	0,314	0,277	0,251

	B										
A	**550**	**560**	**600**	**630**	**650**	**700**	**710**	**750**	**800**	**900**	**1000**
180	0,455	0,434	0,409	0,398	0,379	0,375	0,368	0,354	0,344	0,333	0,323
200	0,421	0,404	0,384	0,370	0,356	0,348	0,343	0,330	0,320	0,310	0,300
225	0,405	0,390	0,368	0,357	0,342	0,333	0,329	0,321	0,309	0,303	0,294
250	0,390	0,371	0,355	0,343	0,329	0,321	0,316	0,309	0,297	0,290	0,282
280	0,367	0,349	0,333	0,322	0,309	0,306	0,300	0,286	0,282	0,271	0,263
300	0,344	0,334	0,316	0,306	0,297	0,289	0,285	0,271	0,264	0,255	0,246
315	0,326	0,318	0,301	0,291	0,284	0,275	0,268	0,260	0,251	0,243	0,235
355	0,317	0,303	0,289	0,278	0,266	0,262	0,257	0,246	0,239	0,231	0,223
400	0,300	0,291	0,281	0,267	0,257	0,250	0,247	0,238	0,229	0,223	0,216
450	0,289	0,281	0,270	0,257	0,250	0,244	0,237	0,230	0,221	0,214	0,206
500	0,287	0,273	0,259	0,250	0,240	0,234	0,230	0,222	0,215	0,208	0,202
550	0,278	0,270	0,253	0,237	0,229	0,222	0,219	0,219	0,211	0,209	0,205
560	0,275	0,266	0,244	0,243	0,233	0,221	0,219	0,215	0,209	0,205	0,201
600	0,272	0,264	0,242	0,240	0,230	0,219	0,217	0,211	0,206	0,201	0,197
630	0,269	0,259	0,241	0,237	0,227	0,219	0,217	0,208	0,203	0,198	0,192
650	0,264	0,256	0,239	0,234	0,225	0,218	0,216	0,206	0,201	0,195	0,189
700	0,259	0,255	0,238	0,233	0,223	0,217	0,215	0,205	0,200	0,194	0,188
710	0,256	0,253	0,237	0,232	0,222	0,215	0,214	0,204	0,199	0,194	0,188
750	0,254	0,250	0,233	0,229	0,219	0,213	0,212	0,203	0,197	0,192	0,186
800	0,253	0,248	0,228	0,226	0,216	0,211	0,209	0,201	0,194	0,189	0,183
900	0,248	0,244	0,226	0,223	0,210	0,207	0,205	0,197	0,191	0,185	0,180
1000	0,245	0,240	0,222	0,220	0,208	0,204	0,201	0,193	0,188	0,182	0,176
1100	0,242	0,236	0,219	0,217	0,206	0,202	0,199	0,189	0,186	0,179	0,173
1250	0,237	0,233	0,216	0,213	0,201	0,199	0,197	0,187	0,183	0,177	0,171
1400	0,234	0,231	0,214	0,211	0,198	0,196	0,195	0,185	0,182	0,176	0,171
1500	0,232	0,230	0,212	0,209	0,196	0,194	0,193	0,183	0,181	0,175	0,170
1600	0,230	0,228	0,210	0,207	0,193	0,191	0,191	0,181	0,180	0,174	0,170

Noise data

Level of acoustic output corrected with filter A

$$L_{WA} = L_{W1} + 10 \log(S) + K_A$$

L_{WA}	[dB(A)]	level of acoustic output corrected with filter A
L_{W1}	[dB]	level of acoustic output L_{W1} related to the 1 m^2 section
S	[m^2]	duct cross section
K_A	[dB]	correction to the weight filter A

Level of acoustic output in octave ranges

$$L_{Woct} = L_{W1} + 10 \log(S) + L_{rel}$$

L_{Woct}	[dB]	spectrum of acoustic output in octave range
L_{W1}	[dB]	level of acoustic output L_{W1} related to the 1 m^2 section
S	[m^2]	duct cross section
L_{rel}	[dB]	relative level expressing the shape of the spectrum

Tables of acoustitc values

Level of acoustic output L_{W1}[dB] related to the 1 m^2 section

	ξ [-]											
w [m/s]	**0,2**	**0,3**	**0,4**	**0,5**	**0,6**	**0,7**	**0,8**	**0,9**	**1**	**1,5**	**2**	**2,5**
2	15,5	18,7	20,9	22,6	24	25,2	26,3	27,2	28	31,2	33,4	35,1
3	26,1	29,2	31,5	33,2	34,6	35,8	36,9	37,8	38,6	41,7	44	45,7
4	33,6	36,7	39	40,7	42,1	43,3	44,3	45,3	46,1	49,2	51,5	53,2
5	39,4	42,5	44,8	46,5	47,9	49,1	50,2	51,1	51,9	55	57,3	59
6	44,1	47,3	49,5	51,3	52,7	53,9	54,9	55,8	56,6	59,8	62	63,8
7	48,2	51,3	53,5	55,3	56,7	57,9	58,9	59,8	60,7	63,8	66,1	67,8
8	51,6	54,8	57	58,8	60,2	61,4	62,4	63,3	64,1	67,3	69,5	71,3
9	54,7	57,9	60,1	61,8	63,2	64,4	65,5	66,4	67,2	70,4	72,6	74,3
10	57,4	60,6	62,8	64,6	66	67,2	68,2	69,1	70	73,1	75,3	77,1
11	59,9	63,1	65,3	67,1	68,5	69,7	70,7	71,6	72,4	75,6	77,8	79,6
12	62,2	65,4	67,6	69,3	70,7	71,9	73	73,9	74,7	77,9	80,1	81,8

Correction to the weight filter A

w [m/s]	**2**	**3**	**4**	**5**	**6**	**7**	**8**	**9**	**10**	**11**	**12**
K_A [dB]	-15	-11,8	-9,8	-8,4	-7,3	-6,4	-5,7	-5	-4,5	-4	-3,6

Relative level expressing the shape of the spectrum L_{rel}

	f [Hz]							
w [m/s]	**63**	**125**	**250**	**500**	**1000**	**2000**	**4000**	**8000**
2	-4,5	-6,9	-10,9	-16,7	-24,1	-33,2	-43,9	-56,4
3	-3,9	-5,3	-8,4	-13,1	-19,5	-27,6	-37,4	-48,9
4	-3,9	-4,5	-6,9	-10,9	-16,7	-24,1	-33,2	-43,9
5	-4	-4,1	-5,9	-9,4	-14,6	-21,5	-30,0	-40,3
6	-4,2	-3,9	-5,3	-8,4	-13,1	-19,5	-27,6	-37,4
7	-4,5	-3,9	-4,9	-7,5	-11,9	-17,9	-25,7	-35,1
8	-4,9	-3,9	-4,5	-6,9	-10,9	-16,7	-24,1	-33,2
9	-5,2	-3,9	-4,3	-6,4	-10,1	-15,6	-22,7	-31,5
10	-5,5	-4	-4,1	-5,9	-9,4	-14,6	-21,5	-30
11	-5,9	-4,1	-4	-5,6	-8,9	-13,8	-20,4	-28,8
12	-6,2	-4,3	-3,9	-5,3	-8,4	-13,1	-19,5	-27,6

VII. MATERIAL, FINISHING

- Damper casings are made from galvanized sheet metal without further surface treatment.
- Damper blades are made from fire resistant asbestos free boards made of mineral fibres.
- Thermal fuses are made of sheet brass, thickness 0,5 mm.
- Fasteners are galvanized.
- According to the customer's requirements, dampers can be made of stainless steel material.

  Specifications for stainless-steel design:

  - Class A2 – Food-grade stainless steel (AISI 304 – EN 1.4301)
  - Class A4 – Chemistry-grade stainless steel (AISI 316, 316L – EN 1.4401, EN 1.4404)

  The respective stainless steel is the material for all components that are located or entering the damper inner space; components outside the damper casing are typically from galvanised sheet metal (fasteners for mounting the actuator or manual control), frame components.

  The following components, including the fasteners, are made from stainless steel at all times:

  1) Damper casing and all components permanently attached
  2) Blade holders including pins, metal parts of blades
  3) Parts of a manual control entering the inner space of a damper casing
  4) Inspection opening cover including the stirrup and fasteners (if they are parts of the cover)

  The damper blade is made of asbestos-free, fire-resistant mineral fibre boards joined with U-shaped drive staples, sealed on the outer side with K84 adhesive.

  Thermal fuse is identical for all material variants of the dampers. Upon specification by customer, the thermal fuse can be made from A4 from stainless steel sheet metal.

  Thermoelectric activation device BAT is modified for stainless-steel variant of the dampers; standard galvanised screws are replaced with stainless-steel M4 screws of corresponding class. Damper casing has stainless-steel riveting M4 nuts.

  Plastic, rubber and silicon components, sealants, foaming tapes, glass-ceramic seals, housings, brass bearings of the blade, actuators, and end switches are identical for all material variants of the dampers.

  Some fasteners and components are only available in one class of stainless steel; the type will be used in all stainless-steel variants.

  The damper blade in the variant for chemical environments (Class A4) is always treated with a coating of chemically resistant Promat SR.

  Any other requirements for the design will be considered atypical and will be addressed on an individual basis.

VIII. TRANSPORTATION, STORAGE AND WARRANTY

Logistic terms

- Dampers are delivered on pallets. As standard, the dampers are wrapped in plastic foil for protection during transport and must not be used for long-term storage. Temperature changes during transport can cause condensation of water inside the packaging and thereby cause corrosion of materials used in the dampers (e.g. white corrosion on zinc-coated items or mould on calcium silicate). Therefore, it is necessary to remove the transport packaging immediately after unloading to allow air to circulate around the product.
- The dampers must be stored in clean, dry, well ventilated and dust-free environment out of direct sunlight. Ensure protection against moisture and extreme temperatures (minimum temperature +5°C). The dampers must be protected against mechanical and accidental damage prior to installation.
- Another required packaging system should be approved and agreed by manufacturer. Packaging material is not returnable in case that another packaging system (material) is required and used and it is not included into final price of damper.
- Dampers are transported by box freight vehicles without direct weather impact, there must not occur any shocks and ambient temperature must not exceed +50°C. Dampers must be protected against impact when transported and manipulated. During transportation, the damper blade must be in the "CLOSED" position.
- Dampers must be stored indoor in environment without any aggressive vapours, gases or dust. Indoor temperature must be in the range from -30°C to +50°C and maximum relative humidity 95%.

Warranty

- The manufacturer provides a warranty of 24 months from the date of dispatch for the dampers.
- The warranty for fire dampers FDMA 120, provided by the manufacturer, is completely void if actuating, closing and control devices are unprofessionally handled by untrained workers or if electric components, i.e. limit switches, actuators, communication and supply devices and thermoelectric activation devices are dismounted.
- The warranty is void if dampers are used for other purposes, devices and working conditions than those allowed by these technical conditions or if the dampers are mechanically damaged during handling.
- If the dampers are damaged by transport, a record must be written down with the forwarder at reception for later complaint.

IX. ASSEMBLY, ATTENDANCE AND MAINTENANCE

- Assembly, maintenance and damper function check can be done only by qualified and trained person, i.e. “AUTHORIZED PERSON” according to the manufacturer documentation. All works done on the fire dampers must be done according international and local norms and laws.
- All effective safety standards and directives must be observed during damper assembly.
- To ensure reliable damper function it is necessary to avoid blocking the actuating mechanism and contact surfaces with collected dust, fibre and sticky materials and solvents.
- Flange and screw joints must be conductively connected to protect against dangerous contact. 2 galvanized lock washers that are placed under the head of one screw and a fastened nut are used for conductive connection.

Manual operation - actuator control without electric voltage

- A special wrench (part of the actuator) can be used to manually turn the damper blade to any position. When the wrench is turned in the direction of the arrow, the damper blade rotates to its open position. As the blade rotation is stopped, in every position, the actuator will be locked. Unlocking is possible even manually as per instructions on the actuator, or by the activation of the supply voltage.
- If the actuator is manually locked, the damper blade will not close in the event of a fire after the activation of the thermoelectric activation device BAT. To restore correct damper operation, the actuator must be unlocked (manually or by applying power supply).

Limit switches

- If the damper is equipped with limit switches and these switches are not used during operation (e.g. because of a project change), they can be left on the damper and not connected (they need not be dismounted).
- On the other hand, if the limit switch is to be added to the damper design, the change can be implemented by change kit.
- These facts must be recorded in the respective operation documentation of the damper (record books of the damper, fire logs, etc.) and subsequently, adequate function checks must be carried out.

Installation / fixing the damper

- The damper casing shall not be deformed in the course of bricking in.
- Once the damper is built in, the damper blade shall not grind on the damper casing during opening or closing.

Protection of the damper casing against buckling during installation, especially for large sizes!

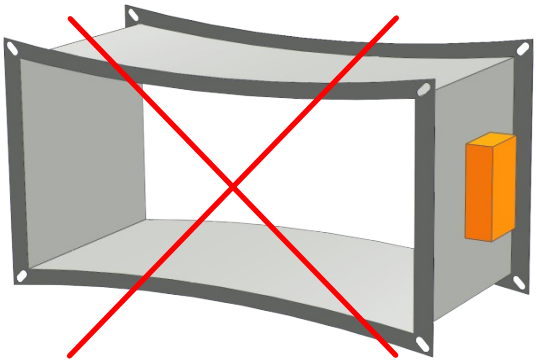

WRONG!

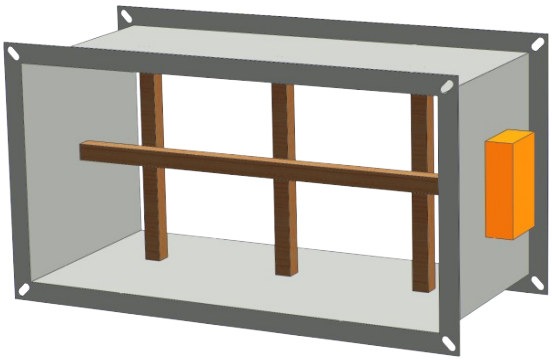

Reinforcement of the casing with wooden beams

Commissioning and revisions

- Before putting the damper into operation, serviceability checks and functional tests must be carried out including testing of functionality of all electrical elements. After putting into operation these serviceability checks must be carried at least twice a year. If no defect is found during two subsequent serviceability checks, these checks can be carried out once a year.
- In case that dampers are found unable to serve for their function for any cause, it must be clearly marked. The operator is obliged to ensure that the damper is put into condition in which it is ready for function and meanwhile he is obliged to provide the fire protection by another appropriate way.
- Results of regular checks, imperfections found and all-important facts connected with the damper function must be recorded in the "FIRE BOOK" and immediately reported to the operator.
- Before entering the dampers with actuator into operation after their assembly and by sequential checks. Check of blade rotation into the breakdown position "CLOSED" can be done after disconnecting the actuator supply (e.g. by pressing the test button at the thermoelectric activation device BAT or disconnecting the supply from ELECTRICAL FIRE SIGNALISATION). Check of blade rotation back into the "OPEN" position can be done after restoration of power supply (e.g. by releasing the test button or restoration of supply from ELECTRICAL FIRE SIGNALISATION). Without power supply, the damper can be operated manually and fixed in any required position. Release of the locking mechanism can be achieved manually or automatically by applying the supply voltage. It is recommended to provide periodical checks, maintenance and service actions on fire equipment by authorized persons. The authorized persons can be trained by producer, or by authorized distributor. All effective safety standards and directives must be observed during fire damper assembly.
- Visual inspection of proper damper installation, inner area of a damper, damper blade, contact surfaces and silicon seal.

Following checks must be carried out for dampers with manual control

Check of a manual control and thermal fuse

- **To check the function of the manual control proceed as follows:**
- Turn the damper blade to "CLOSED" position as follows:
  - The damper blade is in "OPEN" position.
  - By pressing the activation lever ("OPEN" position), release the control lever to turn the damper blade to the "CLOSED" position.
  - Check the damper blade rotation to "CLOSED" position.
  - The closing of the damper blade must be smooth and fast and the control lever shall be in „CLOSED“ position.(If the damper is not closing strongly enough and the control lever is not reliably locked by the latch in the "CLOSED" position, it is necessary to set a higher preload of the closing spring using the toothed rosette)
- Turn the damper blade to "OPEN" position as follows:
  - Release the latch in the "CLOSED" position by pressing and return the control lever to the second end position, where the lever is held by the trigger lever in the "OPEN" position.
  - Check the damper blade rotation to "OPEN" position.
- **Check of function and condition of the thermal fuse:**
  - By removing the thermal fuse from the pin of the triggering device, its correct function is checked.
  - The pin must be extended and the triggering lever must be flipped (position "OPEN").
  - If this does not happen, it is necessary to check the pin and spring of the triggering device, or replace the base plate. The base plate is attached to the damper body with three M5 screws with nuts.

Following checks must be carried out for dampers with actuator

- Check the rotation of the blade to "CLOSED" fail-safe position after disconnection the power supply of the actuator (e.g. by pressing the test button on the thermoelectric activation device BAT or by disconnection the power supply from electrical fire signalization). Check the rotation of the blade back to "OPEN" position by restoring the power supply to the actuator (e.g. by releasing the test button or by restoring the power supply from electrical fire signalization).

Following checks must be carried out for dampers with optical smoke detector

- The function checks of the optical smoke detector are to be carried out by employees of an authorized organization who have corresponding electrotechnical qualification and have been properly trained by the manufacturer. The function checks are to be carried out as a part of function checks of the fire dampers, at least 1x a year.
- For the function checks, the damper blade should be in "CLOSED" position with the fan off or with closed air regulation situated between the fan and the fire damper.

- Inspection opening disassembly
  - Release the covering lid by turning the wing nut and while turning the lid right or left release it from the security belt. Then tilt the lid and remove it from its original position.

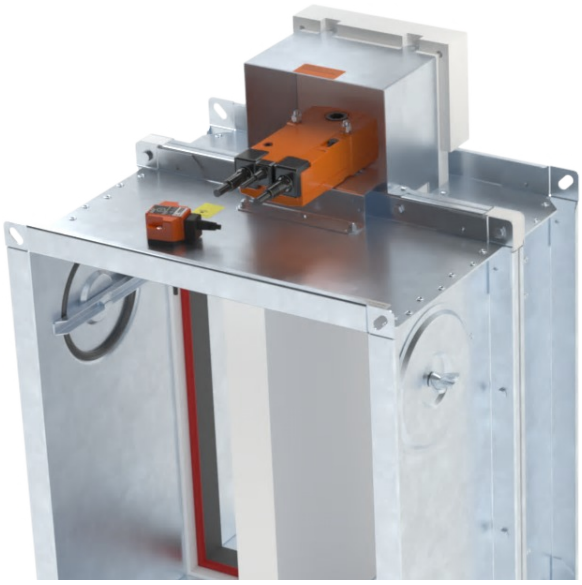

Inspection opening detail

- Ensure each damper is fully checked for operational capability, control should be initiated from the control system or by manual control. Damper blades should open and close correctly and operation should be visually inspected and documented prior to handover.

How to proceed after Tf1 or Tf2 fuses have been activated

- If the thermal fuse **Tf1** is interrupted (due to temperature outside the duct), it is necessary to replace the spring return actuator. → see page 10
- If the thermal fuse **Tf2** is interrupted (due to temperature inside the duct) , only the spare part ZBAT 72 (95/120/140) needs to be replaced (acc.to the activation temperature). → see page 10

X. ORDERING INFORMATIONS

Ordering key

1	2	3		4	5	6	7		8	9	10
FDMA 120	EN	800x700	/	375	.40	120	Q30	-	ZN	IW	G

EXAMPLES:

FDMA 120 EN 800x700/375 .40 Q30-ZN

Fire damper FDMA 120, dimension 800x700 mm, built length 375 mm, control design with spring return actuator AC 230 V, standard activation temperature 72 °C, flange dimension 30 mm, galvanized material variant, standard silicon seal.

FDMA 120 EN 800x700/375 .40 120 Q30-ZN IW G

Fire damper FDMA 120, dimension 800x700 mm, built length 375 mm, control design with spring return actuator AC 230 V, activation temperature 120 °C, flange dimension 30 mm, galvanized material variant, impregnation against humidity, Silicone-free rubber.

1| Fire damper type - FDMA 120

2| Country of destination

3| Damper dimensions A x B → see pages 15 to 20

"A" is the width of the damper

"B" is the height of the damper

4| Built length - 375 mm

5| Damper design

.01	Manual control and thermal
.11	Manual control and thermal with a terminal switch („CLOSED“)
.40	With actuating mechanism BF 230-TN (BFL, BFN 230-T)
.41	With actuating mechanism BF 24-TN (BFL, BFN 24-T) , with smoke detector ORS 142 K and with supply device BKN 230-24-MOD (voltage AC 230 V
.50	With actuating mechanism BF 24-TN (BFL, BFN 24-T)
.51	With actuator BF 24-TN (BFL, BFN 24-T), with smoke detector ORS 142 K (voltage AC/DC 24 V)
.63	With communication and supply device BKN 230-24-MOD, with actuating mechanism BF 24-TN-ST (BFL, BFN 24-T-ST) and with smoke detector ORS 142 K
.80	Manual control and thermal with two terminal switches („OPEN“, „CLOSED“)

6| Activation temperature

Manual control		Spring return actuator control	
	72 °C *		72 °C *
104	104 °C	95	95 °C
147	147 °C	120	120 °C
		140	140 °C

** Standard activation temperature*

7| Flange dimension

Q30	Flange width 30 mm
Q20	Flange width 20 mm

8| Material and other design options

ZN	Galvanized
A2	Stainless steel 1.4301 (AISI 304)
A4	Stainless steel 1.4404 (AISI 316L) - included damper blade impregnation against chemical - type PROMAT SR

9| Surface treatment

	Without surface treatment
IW	Damper blade impregnation, impregnating agent PROMAT 2000 - impregnation against humidity
IA	Damper blade impregnation, impregnating agent PROMAT SR - impregnation against chemical

10| Cold seal variant

	Silicone rubber *
G	Silicone-free rubber

** Standard cold seal*

Data label

- Data label is placed on the damper casing (example)

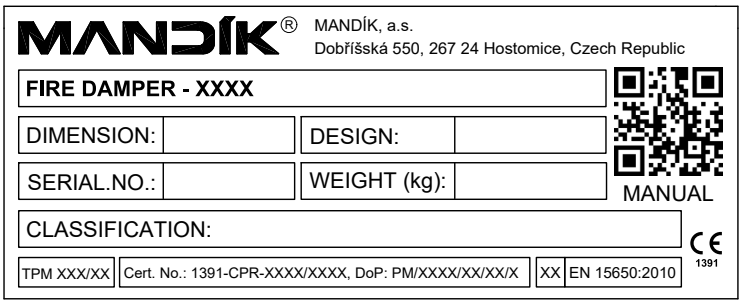

The producer reserves the right for innovations of the product.
For actual product information see www.mandik.com

MANDÍK®

www.mandik.com

MANDÍK, a. s. • Dobříšská 550 • 267 24 Hostomice • Czech Republic • Tel.: +420 311 706 742 • E-Mail: mandik@mandik.cz