MANDÍK

TPM 030/03
Version 2026-09-11

RKKM

Circular regulation/adjustment damper

Technical Documentation
Installation, Commissioning, Operation, Maintenance and Service Manual

MANDÍK®
www.mandik.com

MANDÍK, a.s. • Dobříšská 550 • 267 24 Hostomice • Czech Republic • Tel.: +420 311 706 742 • E-Mail: mandik@mandik.cz

These technical conditions define the range of produced dimensions and versions of "Circular regulation adjustment dampers RKKM"("further only dampers").
These technical conditions apply to the manufacture, design, ordering, assembly, operation and maintenance.

I. CONTENT

II. GENERAL **3**

1. Description..... 3
2. Design..... 3
3. Dimensions and weights..... 4
4. Placement and installation..... 6

III. TECHNICAL DATA **6**

5. Basic parametrs..... 6
6. Electrical elements, wiring diagram..... 7
7. Pressure losses..... 9

IV. MATERIAL, FINISHING **10**

8. Material..... 10
9. Surface treatment..... 10

V. CHECKING, TESTING **10**

10. Checking..... 10
11. Testing..... 10

VI. PACKING, TRANSPORT AND STORAGE **10**

12. Logistical data..... 10

VII. ASSEMBLY **11**

13. Assembly..... 11

VIII. ORDERING INFORMATION **11**

14. Ordering key..... 11

II. GENERAL

Fig. 1 Damper RKKM with servo actuator

Fig. 2 Damper RKKM with manually control

1. Description

1.1. The dampers consist of the body, the leaf and the control mechanism. They serve the regulation of the air flow in the piping by constricting the cross section.

1.2. Dampers are not tight across blade. External Casing leakage class ATC 3 (old marking “C“) acc. to EN 1751.

1.3. The dampers are destined for maximal velocity of air flow 12 $m.s^{-1}$.

1.4. The dampers are intended for environment protected against weather impacts with the classification of climatic conditions class 3K5, without condensation, frost, ice formation, and without water even from other sources than rain according to EN 60 72133, change A2. The air flowing through the dampers must not contain solid, fibrous, adhesive or aggressive particles, and its temperature must lie in the range of −20 to + 80° C.

1.5. If is not noticed other way, all dimensions and weight are in millimeters and kilograms.

2. Design

2.1. Versions of dampers are shown in the table Tab. 14.1.1. The version is designated by two digits following the TP mark.

2.2. According to manner of attachment:

- on cylindrical piping with flanges according to EN 12 0505
- on spiro piping with edge sealing

3. Dimensions and weights

3.1. Damper for connecting to cylindrical piping

Tab. 3.1.1. Dimensions, weights and effective area

Size ⌀D	Dimensions			Number of holes n	Effective area S_{ef} [m²]	Weights [kg]
	L	a	⌀d			
80	150	-	110	4	0,0047	0,92
100	150	-	130	4	0,0074	1,07
110	150	-	140	4	0,0090	1,22
125	150	-	155	8	0,0117	1,39
140	150	-	170	8	0,0147	1,54
160	150	-	195	8	0,0194	1,88
180	150	10	215	8	0,0246	2,23
200	150	20	235	8	0,0305	2,51
225	150	32,5	260	8	0,0387	2,86
250	150	45	285	8	0,0479	3,23
280	150	60	315	8	0,0603	3,66
300	150	70	335	12	0,0693	4,01
315	150	77,5	350	12	0,0765	4,27
355	150	97,5	390	12	0,0973	4,95
400	200	95	445	12	0,1238	6,75
450	200	120	495	12	0,1569	7,80
500	200	145	545	16	0,1940	9,00
560	200	175	605	16	0,2437	10,40
630	200	210	680	16	0,3088	12,80

Damper for connecting to cylindrical piping with flanges according to EN 12 0505.

Fig. 3 Damper with manual control mechanism

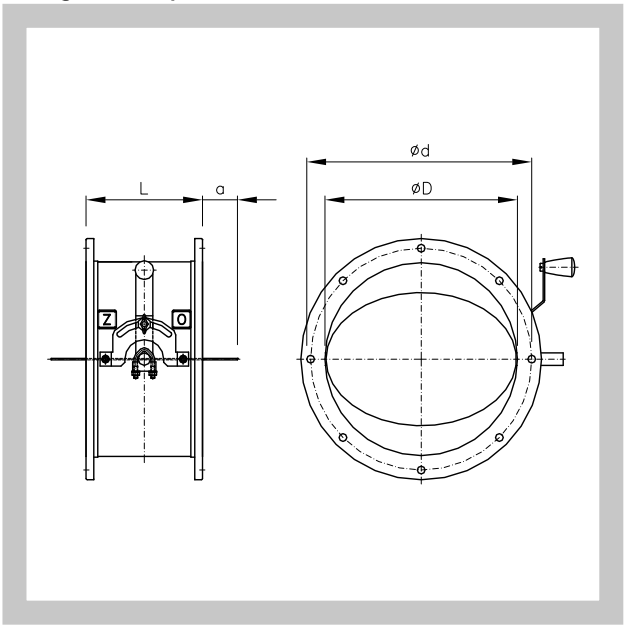

Fig. 4 Damper with control by actuating

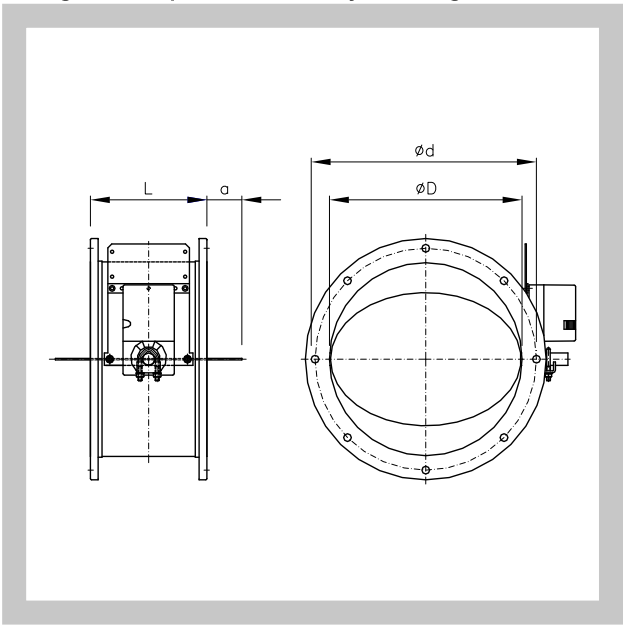

3.2. Damper for connecting to spiro

Tab. 3.2.1. Dimensions, weights and effective area

Size ⌀ D	Dimensions			Effective area S_{ef} [m²]	Weights [kg]
	⌀ D_1	L_1	a		
80	79	240	-	0,0047	0,80
100	99	240	-	0,0074	0,95
110	109	240	-	0,0090	1,10
125	124	240	-	0,0117	1,20
140	139	240	-	0,0147	1,35
150	149	240	-	0,0170	1,45
160	159	240	-	0,0194	1,55
180	179	240	-	0,0246	1,80
200	199	240	-	0,0305	2,05
225	224	240	-	0,0387	2,30
250	249	240	-	0,0479	2,60
280	279	240	15	0,0603	3,90
300	299	240	25	0,0693	4,20
310	309	240	30	0,0740	4,40
315	314	240	32	0,0765	4,50
355	354	240	52	0,0973	5,20
400	399	300	45	0,1238	8,60
450	449	300	70	0,1569	9,90
500	499	300	95	0,1940	11,30
560	559	300	125	0,2437	13,00
630	629	300	160	0,3088	15,20

Fig. 5 Damper with manual control mechanism

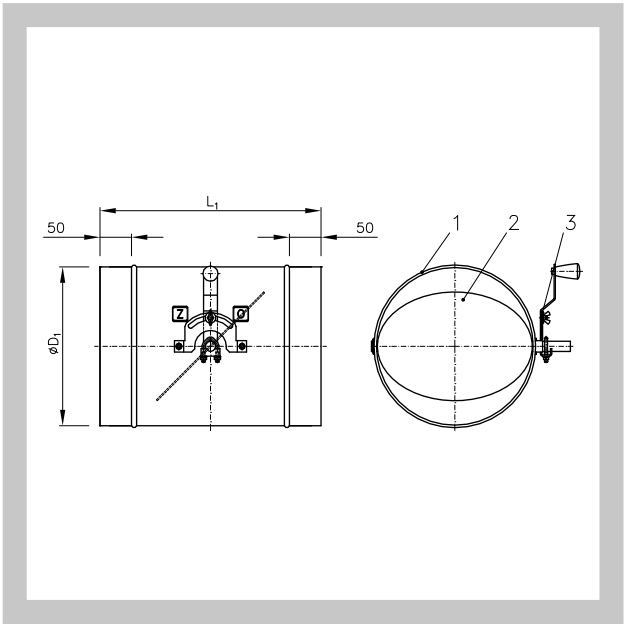

Fig. 6 Damper with control by actuating

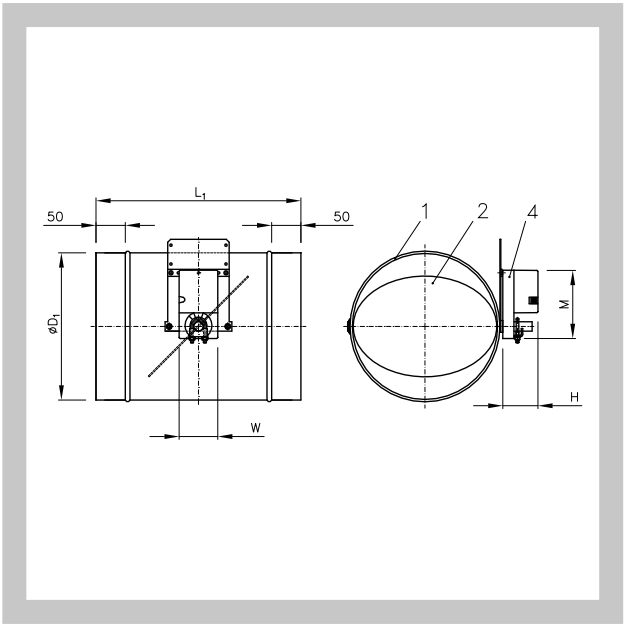

Position:

1. body of control damper 2. sealing leaf of damper 3. control lever 4. actuator

Dampers with actuator are set up by rectangular pin 10 mm.

3.3. Effective area in Tab. 3.1.1. a 3.2.1. valid for fully opened damper S_{ef} [m^2].
Open blade exceeds the damper body on both sides of value "a".
The weights listed in the table are valid for the basic version (manually controlled). The weight of the servo actuator must be added to all other versions − see table 6.1.1.
Atypical dimensions the circular regulation dampers are not manufactured.

4. Placement and installation

4.1. The dampers are meant for installation in air piping. The operating position is whatever you like.

4.2. The minimum space for the control mechanism is 250 mm.

4.3. When positioning the dampers in piping, it is necessary to respect the value "a" (overlap of open leaf). The value "a" is listed in Tab. 3.1.1. a 3.2.1.

III. TECHNICAL DATA

5. Basic parameter

5.1. The maximum pressure difference and the speed of the air flow in the regulation dampers.

Tab. 5.1.1 The maximum pressure difference and the speed of the air flow

Size	Max. Pressure difference Δp [Pa]	Maximum speed of air flow w_{max} [$m.s^{-1}$]
80	2000	18
100	2000	18
110	2000	18
125	2000	18
140	2000	18
150*	2000	18
160	2000	18
180	2000	18
200	2000	18
225	2000	18
250	2000	15
280	2000	15
300	2000	15
310*	2000	15
315	2000	15
355	2000	15
400	1500	12
450	1500	12
500	1500	12
560	1200	12
630	1200	12

*** this version manufactured only on spiro piping**

6. Electrical components, wiring diagram

6.1. Types and weights of the actuators for regulation dampers

Tab. 6.1.1. Types and weights of the actuators

Dampers	Type of actuator	Signalling of position	Torque	Weights of actuator [kg]	Dimensions M x H x W
Dampers up to a size of **315 mm**	Belimo LM 230A-S (.46)	YES	5 Nm	0,60	116 x 64 x 88
	Belimo LM 230A (.45)	NO		0,50	
	Belimo LM 24A-S (.56)	YES		0,60	
	Belimo LM 24A (.55)	NO		0,50	
	Belimo LM 24A-SR (.57)	YES		0,50	
Dampers of size **355 mm** to **500 mm**	Belimo NM 230A-S (.46)	YES	10 Nm	0,85	124 x 62 x 80
	Belimo NM 230A (.45)	NO		0,80	
	Belimo NM 24A-S (.56)	YES		0,85	
	Belimo NM 24A (.55)	NO		0,75	
	Belimo NM 24A-SR (.57)	YES		0,80	
Dampers of size **560 mm** to **630 mm**	Belimo SM 230A-S (.46)	YES	20 Nm	1,10	139 x 64 x 88
	Belimo SM 230A (.45)	NO		1,05	
	Belimo SM 24A-S (.56)	YES		1,05	
	Belimo SM 24A (.55)	NO		1,00	
	Belimo SM 24A-SR (.57)	YES		1,05	

6.2. Supply voltage and power inputs.

Tab. 6.2.1. Supply voltage and power input

Type of actuator	Supply voltage	Power input		
		In operation	Resting position	Dimensioning
LM 230A, LM 230A-S	AC 100 ... 240 V, 50/60 Hz	1,5 W	0,4 W	4 VA
LM 24A, LM 24A-S	AC 24 V, 50/60 Hz; DC 24 V	1,0 W	0,2 W	2 VA
LM 24A-SR	AC 24 V, 50/60 Hz; DC 24 V	1,0 W	0,4 W	2 VA
NM 230A, NM 230A-S	AC 100 ... 240 V, 50/60 Hz	2,5 W	0,6 W	6 VA
NM 24A, NM 24A-S	AC 24 V, 50/60 Hz; DC 24 V	1,5 W	0,2 W	3,5 VA
NM 24A-SR	AC 24 V, 50/60 Hz; DC 24 V	2,0 W	0,4 W	4 VA
SM 230A, SM 230A-S	AC 100 ... 240 V, 50/60 Hz	2,5 W	0,6 W	6 VA
SM 24A, SM 24A-S	AC 24 V, 50/60 Hz; DC 24 V	2,0 W	0,2 W	4 VA
SM 24A-SR	AC 24 V, 50/60 Hz; DC 24 V	2,0 W	0,4 W	4 VA

6.3. Wiring diagram of servo actuators Belimo

Fig. 7 Wiring diagram of servo actuators Belimo LM 230A, NM 230A and SM 230A

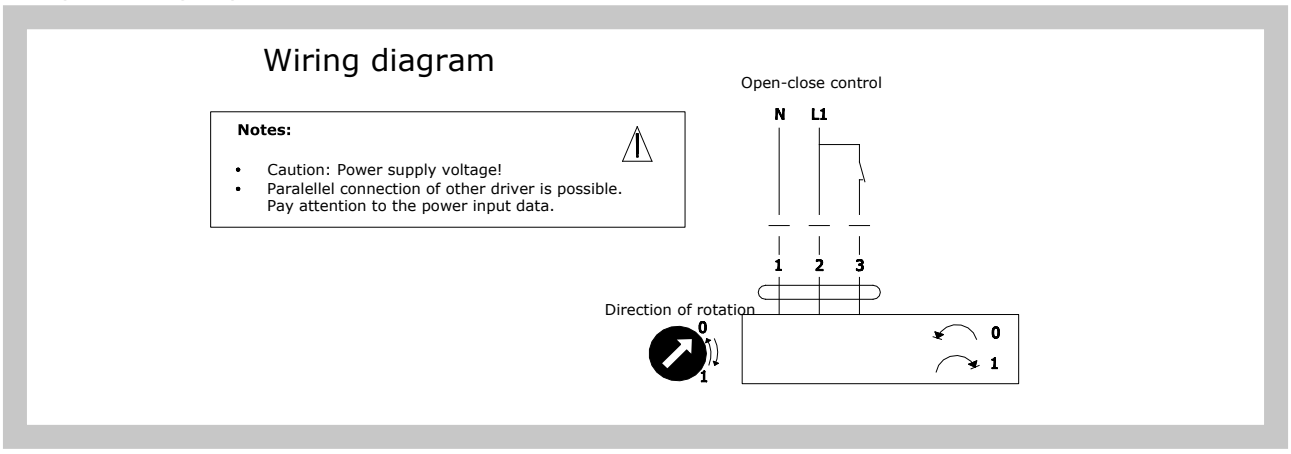

Fig. 8 Wiring diagram of servo actuators Belimo LM 230A-S, NM 230A-S and SM 230A-S

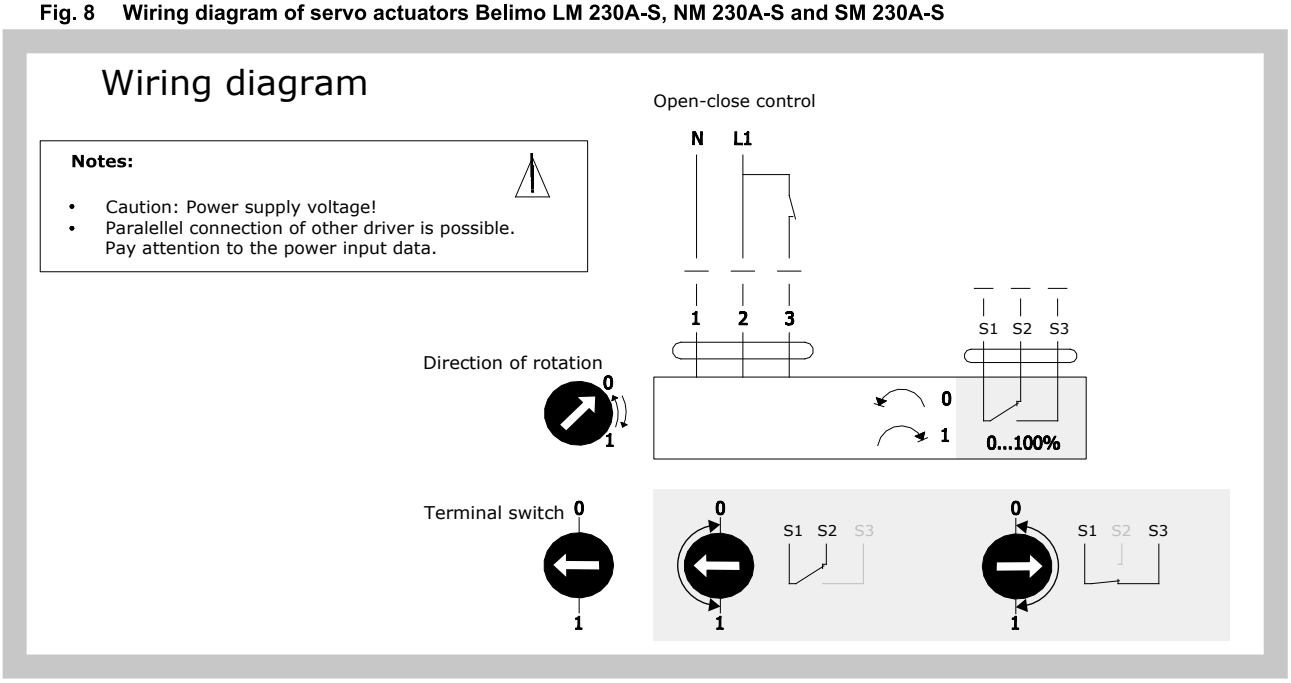

Fig. 9 Wiring diagram of servo actuators Belimo LM 24A, NM 24A and SM 24A

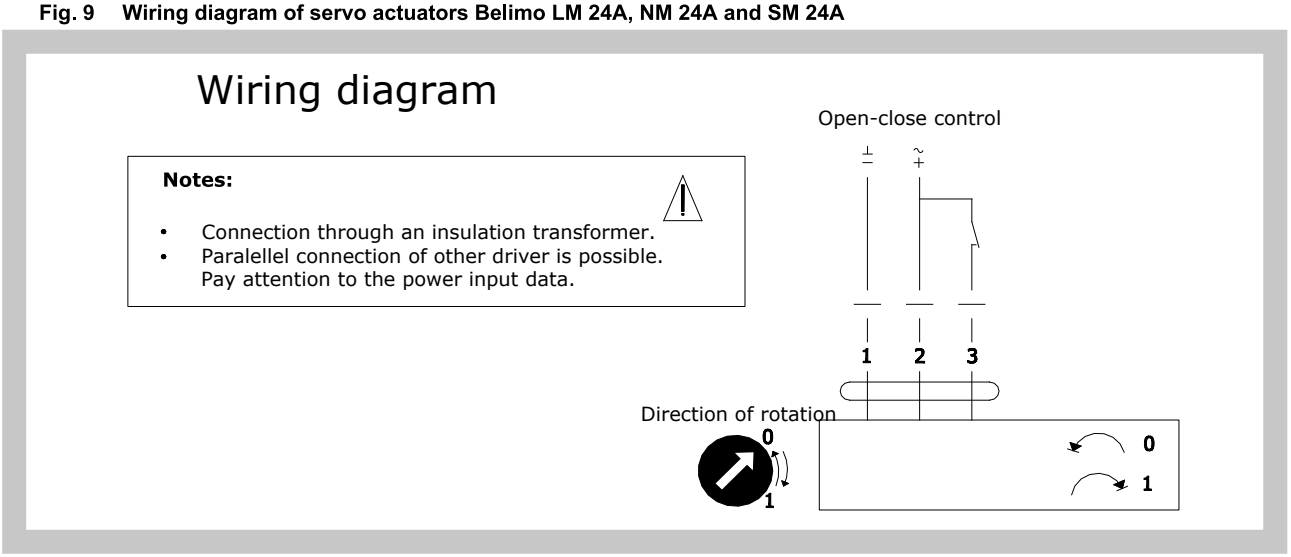

Fig. 10 Wiring diagram of servo actuators Belimo LM 24A-S, NM 24A-S and SM 24A-S

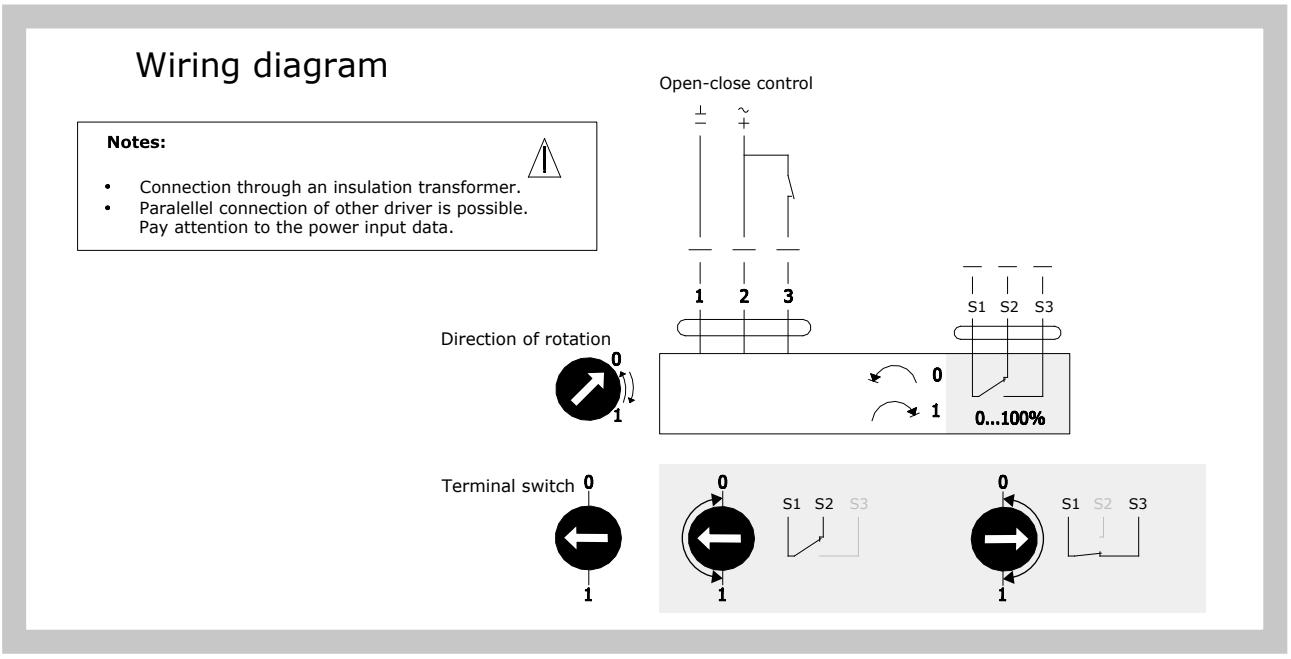

Fig. 11 Wiring diagram of servo actuators Belimo LM 24A-SR, NM 24A-SR and SM 24A-SR

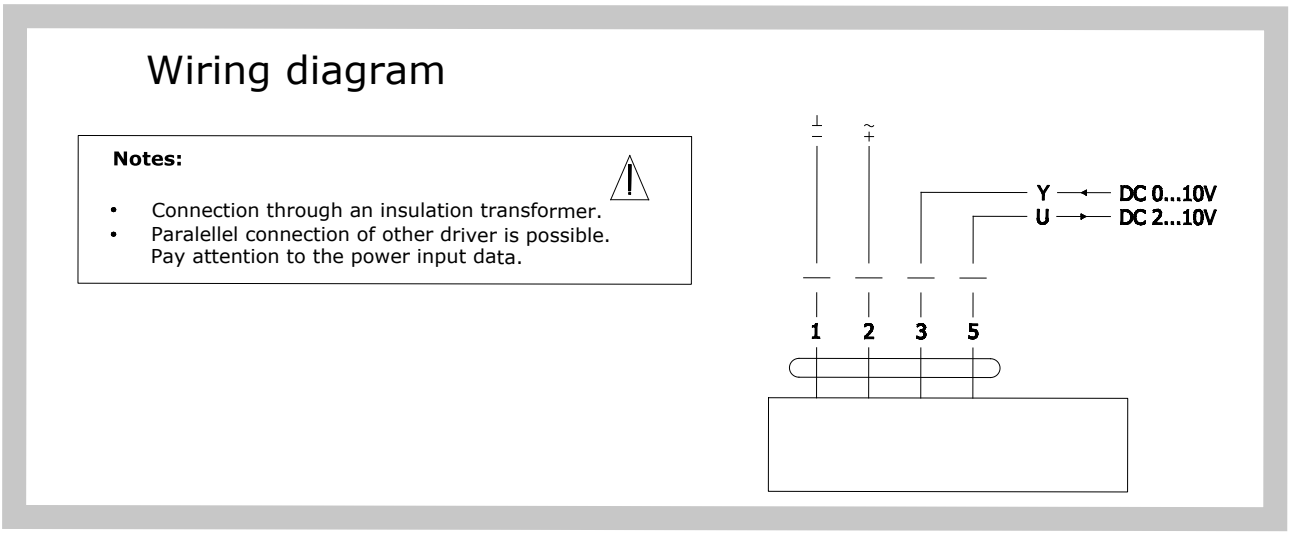

7. Pressure losses

7.1. Pressure losses

Chart 7.1.1. Pressure losses dependent on the turning of the damper's leaf

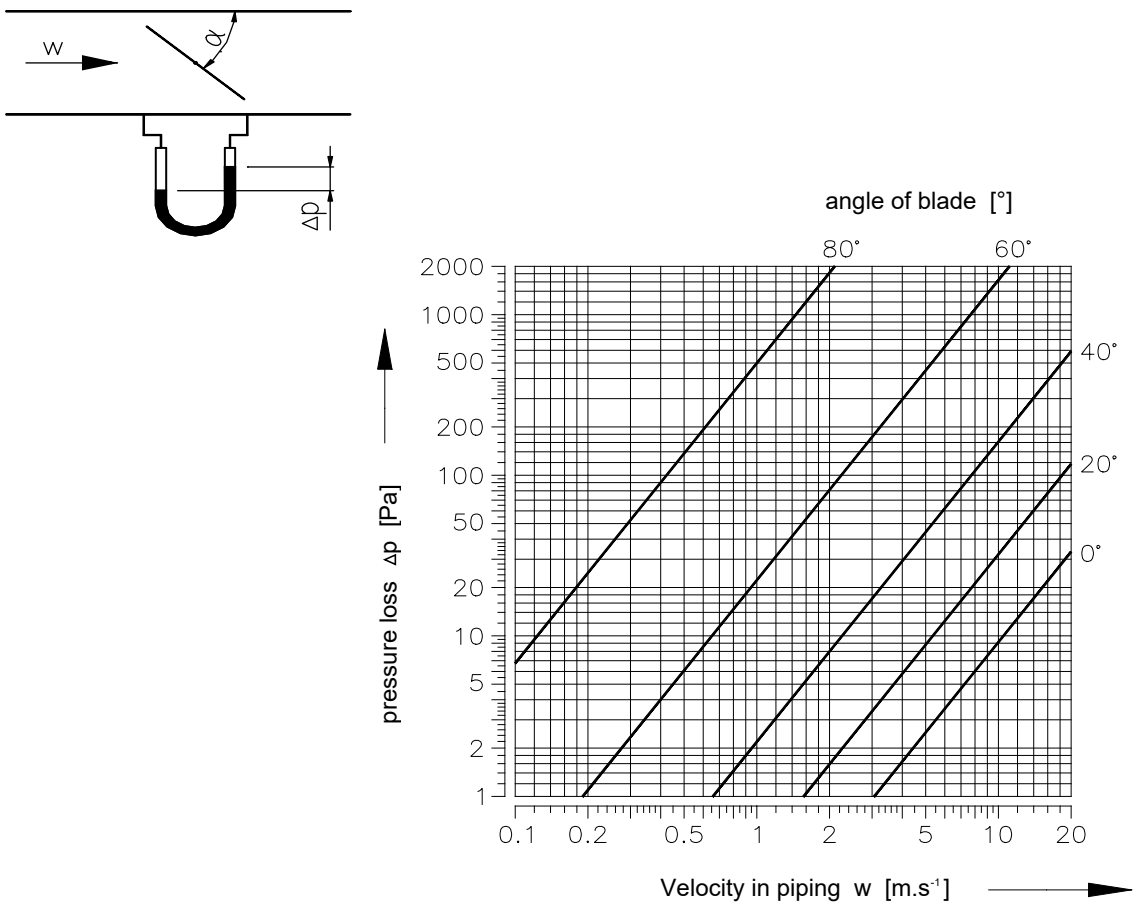

$\dot{V}$	[m³.h⁻¹]	volumetric air flow	Δp	[Pa]	pressure loss when ρ =1,2 kg.m⁻³
w	[m.s⁻¹]	flow speed	α	[°]	angle of flap blade

IV. MATERIAL, FINISHING

8. Material

8.1. The body of the damper and the leaf are made of galvanized sheet; the leaf's journals are of steel. Design on spiro piping is supplied with a rubber lip seal.

8.2. According to the customer's requirements, damper can be made of stainless material.

Specifications for stainless-steel models – classification of stainless steel:

- Class A2 – Food-grade stainless steel (AISI 304 – EN 17240)
- Class A4 – Chemistry-grade stainless steel (AISI 316, 316L – EN 17346, 17349)

The indicated metal is used for all metal components of the damper except the servo drive and its adapters.

The following components, including the fasteners, are made from stainless steel at all times:

1) Damper body and all components permanently attached
2) Leaf pins, metal components of the leaf
3) Controlling components outside the damper (levers, control levers, metal part of the pin or the entire pin)
4) Servo drive mount

Plastic, rubber and silicon components, sealants, servo drives, and end switches are identical for all material variants of the dampers.

Some fasteners and components are available in one class of stainless steel; the type will be used in all stainless-steel variants.

Any other requirements for the design shall be considered atypical and shall be addressed on an individual basis.

9. Surface treatment

9.1. The damper is delivered without further surface treatment.

V. CHECKING, TESTING

10. Checking

10.1. The dimensions are checked by means of the usual measuring instruments according to the norm for non−tolerable dimensions used in air technology.

10.2. Intermediate operation checks of the parts and main dimensions are carried out according to the drawing documents.

11. Testing

11.1. After the plant assembly, a check of the functioning of the closing mechanism and the electrical components is carried out.

VI. PACKING, TRANSPORT, STORAGE

12. Logistical data

12.1. The damper are transported as bulk cargo, using suitable covered means of transport. When agreed upon with the manufacturer, the dampers can be loaded onto palettes. Dampers must be protected from mechanical damage during transport and storage.
If packing is used, it is non−returnable and its price is not included in the price of the damper.

12.2. If not otherwise agreed, the handover is considered when the goods is forwarded to the carrier.

12.3. The dampers must be stored in the indoor environment without any aggressive vapours, gases or dust. Indoor temperature must be in the range from -5 °C to +40 °C and maximum relative humidity 80%. Dampers must be protected against mechanic damages when transported and manipulated.

12.4. The delivery includes a complete damper including the control mechanism.

VII. ASSEMBLY

13. Assembly

13.1. The assembly consists of installing the damper in the air distribution system and if required, connecting the actuating mechanism to the electric net. Connection of the actuating mechanism to the electric net can be done only by trained person.

VIII. ORDERING INFORMATION

14. Ordering key

1	2	3	4	5
RKKM	DN 100	.01	RS -	ZN

EXAMPLE:
RKKM DN 100 .01 RS-ZN
Regulation damper RKKM, dimension DN 100 mm, with manual control, straight connection to circular duct, galvanized material variant.

1| Regulation damper type - RKKM

2| Damper dimensions øD → see page 4

3| Damper design

.01	Manual control
.09	To fit actuator drive - ready to mount an actuator
.43	Actuator with emergency function 230V - closed without voltage
.45	Actuator controlled 230V, two point regulation - without position signal
.46	Actuator controlled 230V, two point regulation - with position signal
.48	Actuator with emergency function 230V - two point regulation + position signal (2 positions) - closed without voltage
.53	Actuator with emergency function 24V - closed without voltage
.55	Actuator controlled 24V, two point regulation - without position signal
.56	Actuator controlled 24V, two point regulation - with position signal
.57	Actuator controlled 24V SR with smooth regulation
.58	Actuator with emergency function 24V - with position signal (2 positions)

For some design, the size range of the product is limited due to the lack of a drive with a larger torque.

4|Duct connection

RS	Straight connection to circular duct
RF	Flanged connection to circular duct

5| Material and other design options

ZN	Galvanized
A2	Stainless steel 1.4301 (AISI 304)
A4	Stainless steel 1.4404 (AISI 316L)

The producer reserves the right for innovations of the product.
For actual product information see www.mandik.com

MANDÍK®

www.mandik.com

MANDÍK, a.s. • Dobříšská 550 • 267 24 Hostomice • Czech Republic • Tel.: +420 311 706 742 • E-Mail: mandik@mandik.cz