MANDÍK

TPM 164/22
Version 2026-09-25

FDMB

Fire damper

Technical Documentation
Installation, Commissioning, Operation, Maintenance and Service Manual

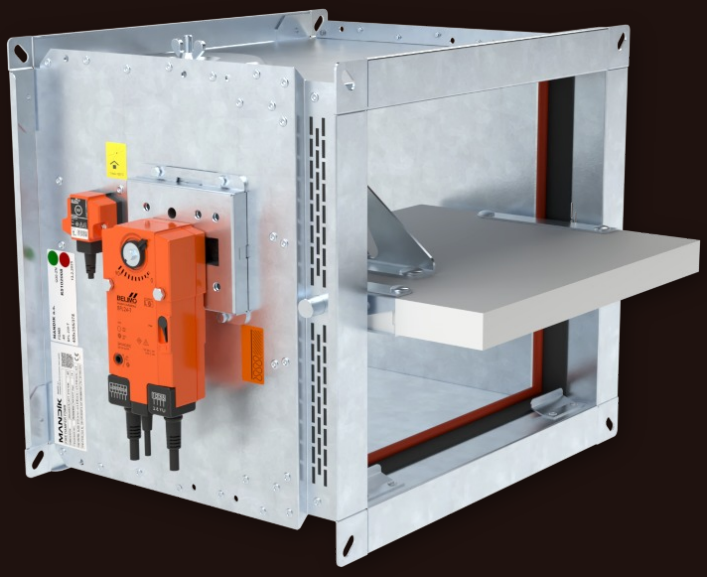

UK CA 2822

CE 1391

CCPI ASSESSED PRODUCT INFORMATION 015800191/1227 Fire dampers

MANDÍK®
www.mandik.co.uk

Manufacturer
MANDÍK, a. s. • Dobříšská 550 • 267 24 Hostomice • Czech Republic • Tel.: +420 311 706 742 • E-Mail: mandik@mandik.cz
Authorized representative
MANDIK UK Ltd • 130 Aztec West • Bristol BS32 4UB • United Kingdom • Tel.: +44 117 4526376 • E-Mail: help@mandik.co.uk

These technical specifications state a row of manufactured sizes and models of fire dampers FDMB.
It is valid for production, designing, ordering, delivery, maintenance and operation.

CONTENT

I. GENERAL....3
Description....3
II. DESIGN....4
Design with manual control....4
Design with spring return actuator....6
Communication and control module MDCM....11
III. DIMENSIONS....12
Technical parameters....14
IV. INSTALLATION....20
Placement and installation....20
Statement of installations....22
In solid wall construction....23
Installation outside solid wall construction....25
In gypsum wall construction....26
Installation outside gypsum wall construction....34
In CLT wall construction....35
In the fire barrier ROCKWOOL Fire Cavity Barrier EN....37
In shaft wall construction....38
In solid ceiling construction....40
In CLT ceiling construction....42
V. SUSPENSION SYSTEMS....44
Example of duct connection....46
VI. TECHNICAL DATA....47
Pressure loss....47
Noise data....49
VII. MATERIAL, FINISHING....50
VIII. TRANSPORTATION AND STORAGE....51
Logistic terms....51
IX. ASSEMBLY, ATTENDANCE AND MAINTENANCE....51
Entry into service and revisions....56
X. ORDERING INFORMATIONS....58
Ordering key....58
Accessories....59
Data label....60

I. GENERAL

Description

Fire dampers are shutters in ducts of air-conditioning devices that prevent the spread of fire and combustion products from one fire segment to the other one by means of closing the duct in the points of fire separating constructions.

Damper blade automatically closes air duct using a closing spring or a spring return actuator. The closing spring is actuated by pressing a button on the manual control or by melting a fusible link.

The return spring of the actuator is actuated when a thermoelectric activation device BAT is activated, when a test button on BAT is pressed or when power supply of the actuator is interrupted.

After closing the blade, the damper is sealed with silicon against smoke penetration. On request by customer, the damper can be supplied silicon-free. In the closed position, the damper is also sealed with material which increases its volume due to increasing temperature and air proofs the air duct.

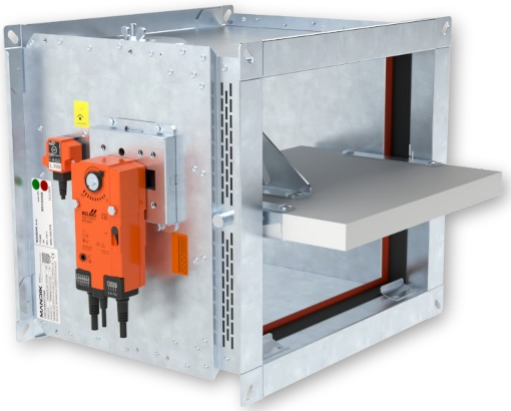

FDMB with spring return actuator

FDMB with manual control

Damper characteristics

- CE certified acc. to BS EN 15650
- Tested in accordance with BS EN 1366-2
- Classified acc. to BS EN 13501-3+A1
- External casing leakage for size: A<160 or B<160 class ATC 4 (old marking “B“), A≥160 a B≥160 class ATC 3 (old marking “C“), Internal leakage class 2 acc. to BS EN 1751
- Cycling test in class C_{10000} acc. to BS EN 15650
- Corrosion resistant acc. to BS EN 15650
- Certificate of constancy of performance UKCA No. 2822-UKCA-CPR-XXXX
- Certificate of constancy of performance CE No. 1391-CPR-XXXX/XXXX
- Declaration of Perfomance UKCA No. PM/FDMB/02/XX/X
- Declaration of Perfomance CE No. PM/FDMB/01/XX/X
- Hygienic assessment of fire dampers - Report No. 1.6/pos/19/19b

Working conditions

- Exact damper function is provided under the following conditions:
  - maximum air velocity 12 m/s
  - maximum pressure difference 1200 Pa
  - the air circulation in the whole damper section must be secured steady over the entire surface.
- Dampers are suitable for systems without abrasive, chemical and adhesive particles.
- Dampers are designed for macroclimatic areas with mild climate according to BS EN IEC 60 721-3-3 ed.2., class 3K22. (Environment 3K22 is typically protected place with regulated temperature)
- Temperature in the place of installation is permitted to range from -30°C to +50°C.

II. DESIGN

Design with manual control

Design .01

- Design with mechanical control with a thermal protective fuse which actuates the shutting device, after the nominal start temperature 72°C has been reached.
- Automatic initiation of the shutting device is not activated if the temperature does not exceed 70°C.
- In case that other start temperatures are required, fusible links with nominal start temperature +104°C or +147°C can be supplied (this requirement must be specified in the order).

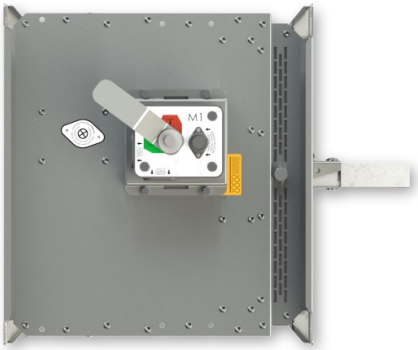

Design .01

ATTENTION:

- Mechanisms are produced in two designs M2 to M3, difference is only in size of inner spring, which closes the fire damper.
- For the size of fire dampers is always assigned the size of mechanism → see pages 14 to 19
- It is not recommended to use different size of mechanism, than given by the manufacturer, otherwise, there is a risk of fire damper destruction.

Design .11

- Design .01 with mechanical control can be complemented with a limit switch signalling of the damper blade position "CLOSED".
- Cable is connected directly to limit switch.
- Limit switch detail → see page 5

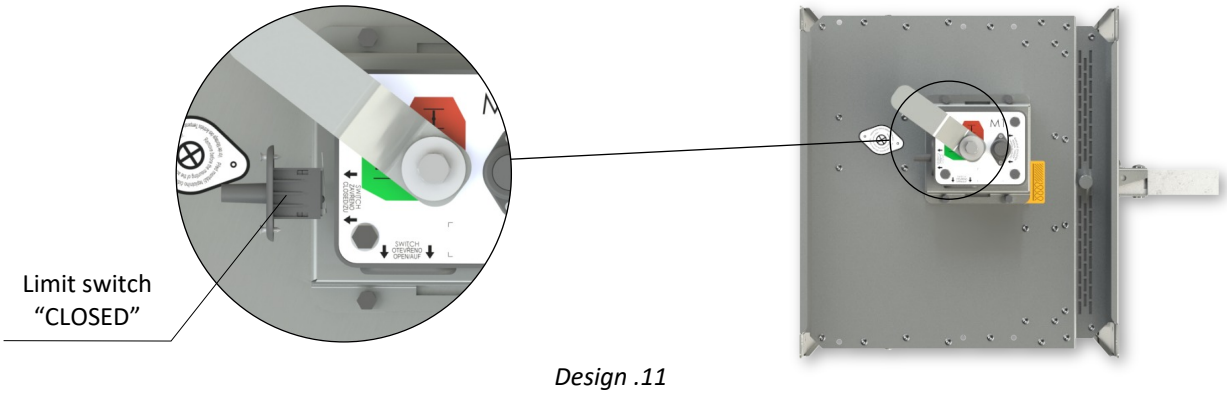

Design .11

Design .80

- Design .01 with mechanical control can be complemented with a terminal switches signaling of the damper blade position "CLOSED" and "OPEN".
- Limit switches are connected via damper casing, cables are connected directly to limit switches.
- Limit switch detail → see page 5

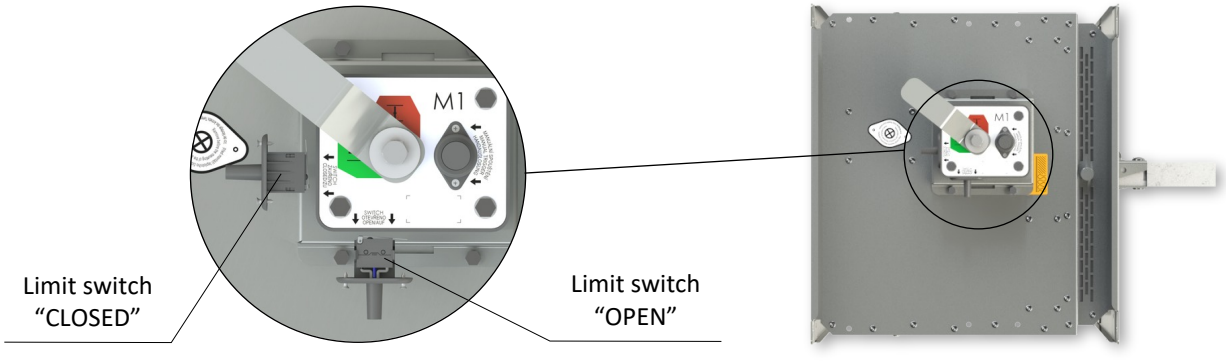

Design .80

Manual control

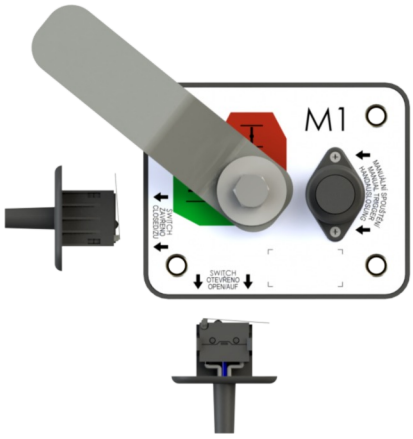

Fusible link replacement:*

1. The mechanism (damper) must be in the closed position (indicated by the red area on the sticker).
2. Press the Close button.
3. Using adjustable pliers, squeeze the fusible link clips together.
4. Pull the fusible link out of the clips.
5. Using adjustable pliers, squeeze the fusible link clips together again.
6. Insert the new fusible link into the clips.

Function check:**

7. Open the mechanism (damper) by moving the lever to the Open position (indicated by the green area on the sticker).
8. Press the Close button and check that the mechanism closes correctly. Repeat steps 7 and 8 at least 3 times.

* The mechanism can be removed for change of the fusible link.
** Caution: Risk of injury from moving parts.

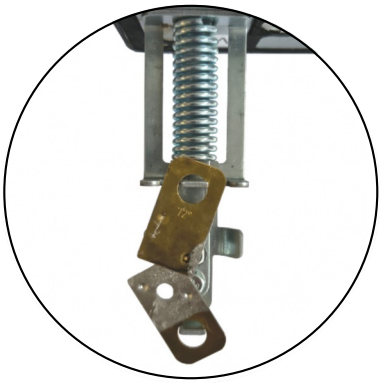

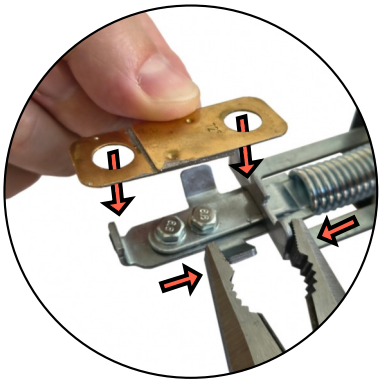

Limit switch G905-300E03W1

<u>This limit switch is possible to connect in two following ways</u>

- CUT-OFF if the arm is moving … connect wire 1+2
- SWITCH-ON if the arm is moving … connect wire 1+4

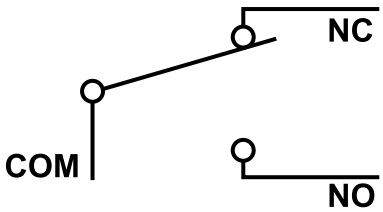

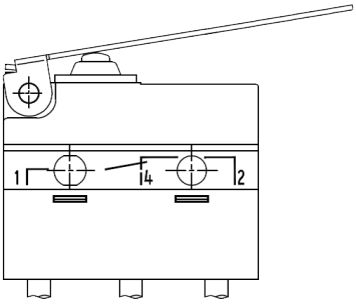

Nominal voltage and maximal current	AC 230V / 5A
Class of protection	IP 67
Working temperature	-25°C … +120°C

1(COM) - black wire
2(NC) - gray wire
4(NO) - blue wire

Design with spring return actuator

Design .40 and .50

- The fire dampers are equipped with Belimo spring return actuators with thermoelectric activation device BAT. The spring return actuator types are BFL, BFN or BF depending on the damper size. (Further mentioned as „actuator“).
- After being connected to power supply 230V or AC/DC 24V, the actuator rotates the damper blade to the operating position "OPEN" and at the same time pre-stretches its return spring.
- When the actuator is power supplied, the damper blade is in the position "OPEN" and the return spring is pre-stretched.
- Time needed for full opening of the damper blade from the position "CLOSED" to the position "OPEN" is maximum 120 sec. If the actuator power supply is interrupted (due to loss of supply voltage, or pressing a test button on the thermoelectric activation device BAT), the actuator rotates the damper blade to the breakdown position "CLOSED".
- The time of closing the damper blade from the position "OPEN" to the position "CLOSED" takes maximum 20 sec.
- In case that the power supply is restored again (the blade can be in any position), the actuator starts to rotate the damper blade back to the position "OPEN".
- A thermoelectric activation device BAT, which contains two fusible links Tf1 and Tf2, is an integral part of the actuator.
- These fuses are activated when temperature +72°C has been reached (the fuse Tf1 due to temperature outside the duct and the fuse Tf2 due to temperature inside the duct).
- After the fusible link Tf1 or Tf2 has been activated, the power supply is permanently and irreversibly interrupted and the actuator, by means of the pre-stretched spring, rotates the damper blade into the breakdown position "CLOSED".
- Signalisation of damper blade position "OPEN" and "CLOSE" is provided by two microswitches.

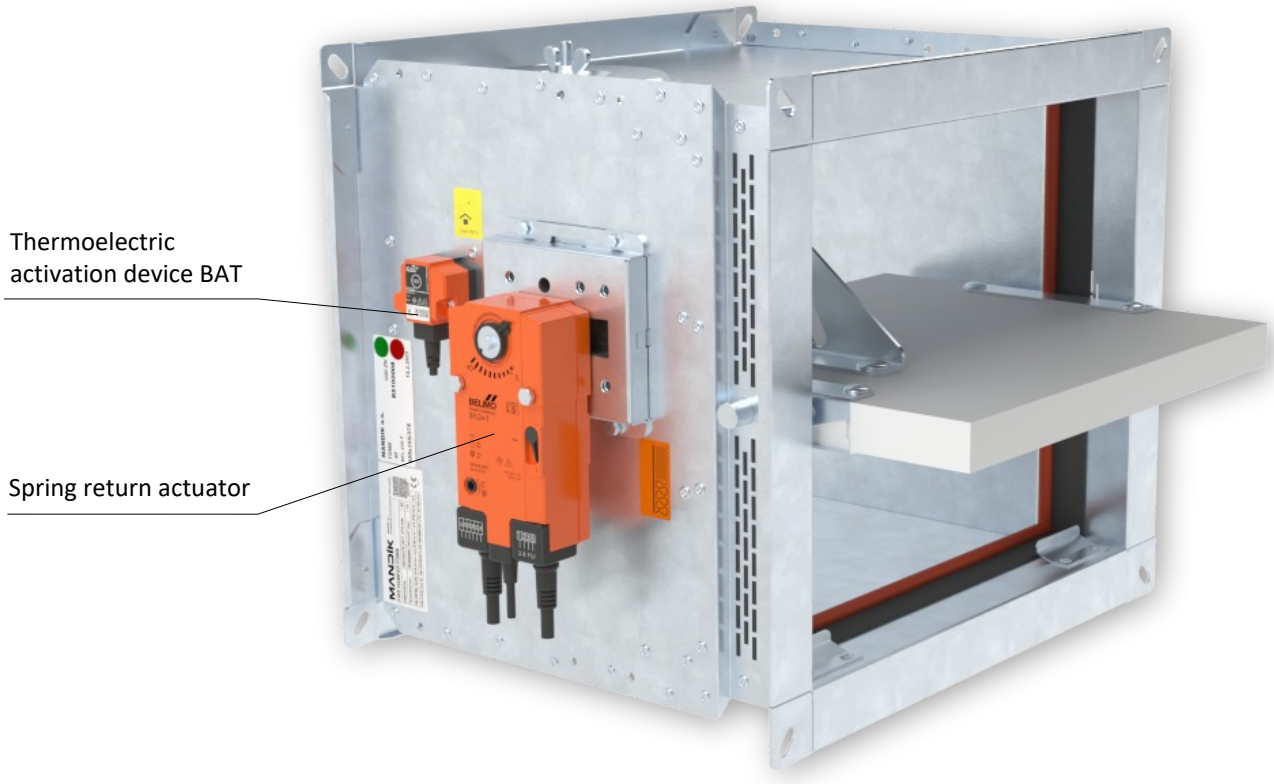

Design .40 and .50

Actuator BELIMO BFL 230-T

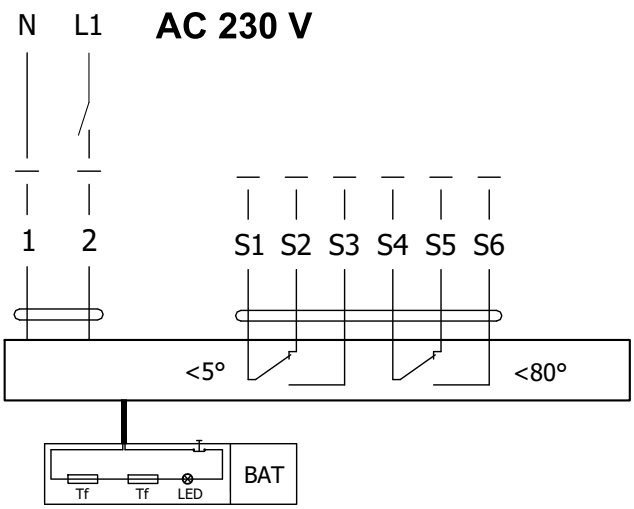

Actuator BELIMO BFL 24-T(-ST)

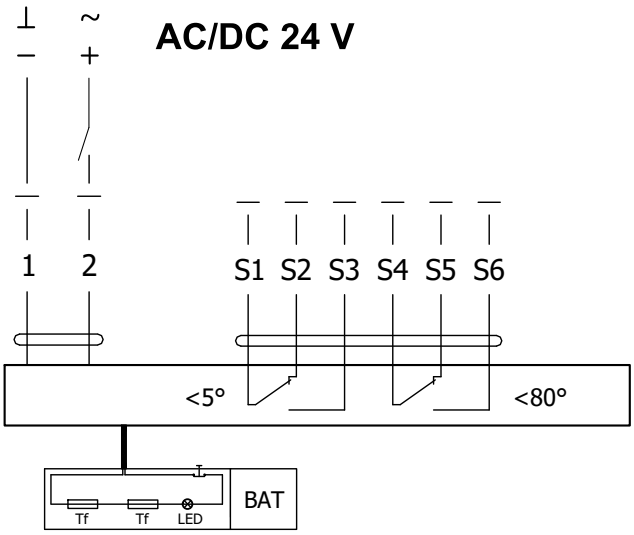

Actuator BELIMO BFL 230-T(-ST), BFL 24-T(-ST)		
Actuator BELIMO - 4 Nm/ 3 Nm Spring	**BFL 230-T(-ST)**	**BFL 24-T(-ST)**
Power voltage	AC 230 V 50/60Hz	AC/DC 24 V 50/60Hz
Power consumption - in operation - in rest position	2,6 W 0,7 W	2,0 W 0,7 W
Dimensioning	4 VA (Imax 4 A @ 5 ms)	2,8 VA (Imax 2,9 A @ 5 ms)
Protection class	II	III
Degree of protection	IP 54	
Running time - motor - spring return	< 60 s ~ 20 s	
Ambient temperature - normal duty - safety duty - non-operating temperature	 -30°C … +55°C The safe position will be attained up to max. +75°C -40°C … +55°C	
Connection - supply/control - auxiliary switch	cable 1 m, 2 x 0,75 mm² (BFL 2xx-T-ST) with 3-pin plug-in connectors cable 1 m, 6 x 0,75 mm² (BFL 2xx-T-ST) with 6-pin plug-in connectors	
Response temperature fusible link	duct outside temperature +72°C duct inside temperature +72°C	

Actuator BELIMO BFN 230-T

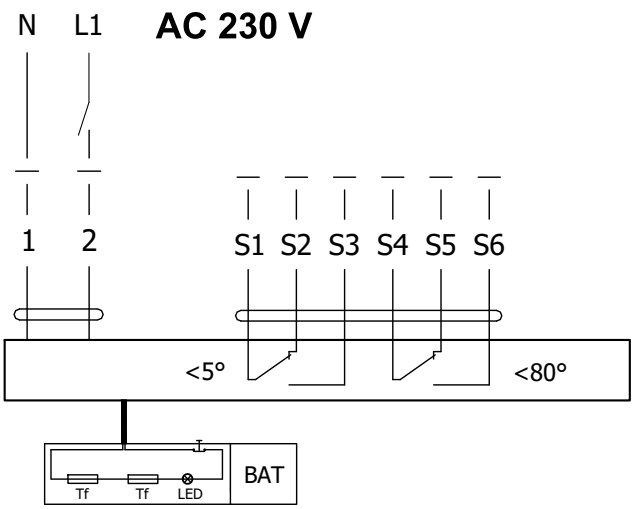

Actuator BELIMO BFN 24-T(-ST)

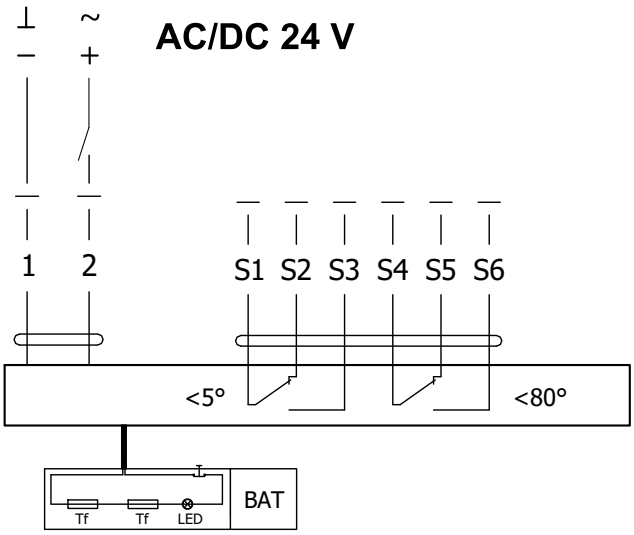

Actuator BELIMO BFN 230-T(-ST), BFN 24-T(-ST)		
Actuator BELIMO - 9 Nm/ 7 Nm Spring	**BFN 230-T(-ST)**	**BFN 24-T(-ST)**
Power voltage	AC 230 V 50/60Hz	AC/DC 24 V 50/60Hz
Power consumption - in operation - in rest position	3,5 W 1,3 W	3,2 W 1,2 W
Dimensioning	6,5 VA (Imax 4 A @ 5 ms)	4,3 VA (Imax 2,9 A @ 5 ms)
Protection class	II	III
Degree of protection	IP 54	
Running time - motor - spring return	< 60 s ~ 20 s	
Ambient temperature - normal duty - safety duty - non-operating temperature	 -30°C … +55°C The safe position will be attained up to max. +75°C -40°C … +55°C	
Connection - supply/control - auxiliary switch	cable 1 m, 2 x 0,75 mm² (BFN 2xx-T-ST) with 3-pin plug-in connectors cable 1 m, 6 x 0,75 mm² (BFN 2xx-T-ST) with 6-pin plug-in connectors	
Response temperature fusible link	duct outside temperature +72°C duct inside temperature +72°C	

Actuator BELIMO BF 230-TN

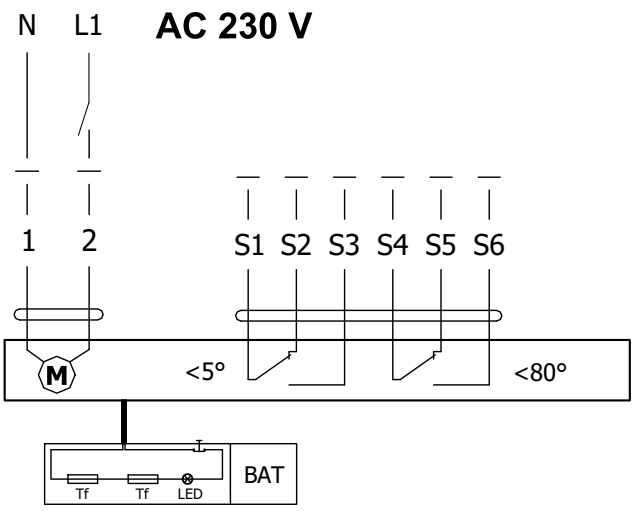

Actuator BELIMO BF 24-TN (-ST)

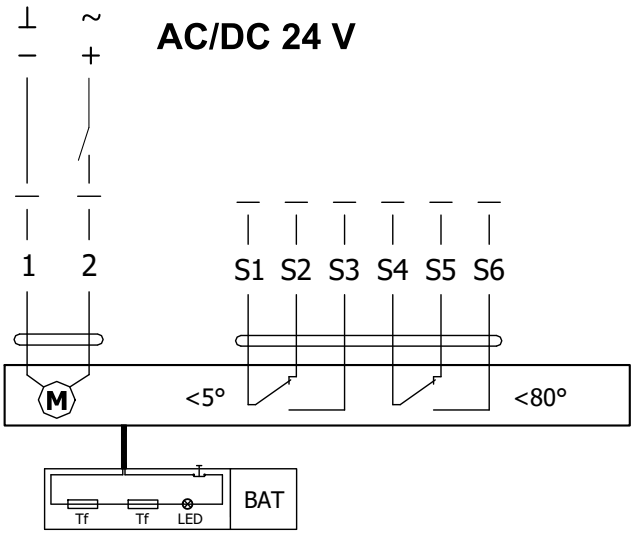

Actuator BELIMO BF 230-TN(-ST), BF 24-TN(-ST)		
Actuator BELIMO - 18 Nm/ 12 Nm Spring	**BF 230-TN(-ST)**	**BF 24-TN(-ST)**
Power voltage	AC 230 V 50/60Hz	AC/DC 24 V 50/60Hz
Power consumption - in operation - in rest position	8,5 W 3 W	7 W 2 W
Dimensioning	11 VA (Imax 8,3 A @ 5 ms)	10 VA (Imax 8,3 A @ 5 ms)
Protection class	II	III
Degree of protection	IP 54	
Running time - motor - spring return	120 s ~ 16 s	
Ambient temperature - normal duty - safety duty - non-operating temperature	 -30°C … +50°C The safe position will be attained up to max. +75°C -40°C … +50°C	
Connection - supply/control - auxiliary switch	cable 1 m, 2 x 0,75 mm² (BF 2xx-TN-ST) with 3-pin plug-in connectors cable 1 m, 6 x 0,75 mm² (BF 2xx-TN-ST) with 6-pin plug-in connectors	
Response temperature fusible link	duct outside temperature +72°C duct inside temperature +72°C	

Thermoelectric activation device BAT

- If the fusible link Tf1 breaks (for a temperature close to the fire damper), it is necessary to replace the actuating mechanism. Thermoelectric starting mechanism BAT is integral part of the actuating mechanism.
- If the fusible link Tf2 is interrupted (due to temperature inside the duct), only the spare part ZBAT 72.
- When one of the fusible links responds, the supply voltage is interrupted permanently and irreversibly.
- The function (interruption of the supply voltage) can be checked by pressing the test button.
- Installation is carried out with the pre-assembled, self-tapping screws.

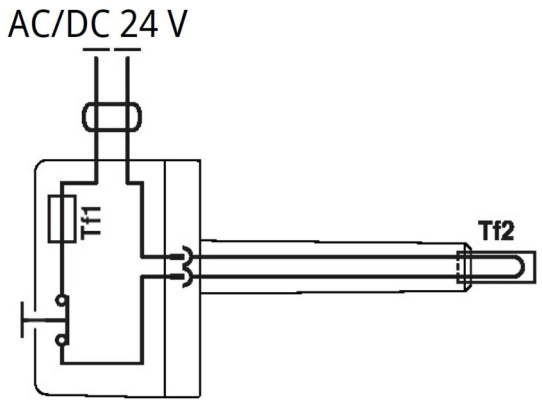

Temperature fusible link

Spare parts are only supplied on the basis of an order.

BELIMO ZBAT 72
Black (BK) = 72°C (standard)

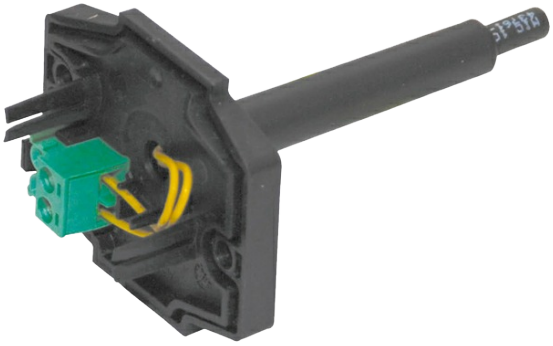

Thermoelectric activation device BAT 72	
Power voltage	AC/DC 24 V 50/60Hz
Rated current	1 A
AC/DC throughput resistance	<1 Ω
Protection class	III
Degree of protection	IP 54
Probe length	65 mm
Ambient temperature Storage temperature Ambient humidity	-30°C … +50°C -40°C … +50°C Max. 95% RH, non-condensing
Connection supply	Cable 1 m, 2 x 0.5 mm², Betaflam cable heatresistant up to 145°C
Response temperature fusible link	Duct inside temperature +72°C Duct outside temperature +72°C

Communication and control module MDCM

- The MDCM damper control module is connected on a bi directional communication loop back to a control panel, typically located at the FCC.
- Each MDCM has a 230v local spur to power the damper actuator.
- Up to 96x MDCM's can be connected on one loop and multiple loops can be incorporated.
- This accessory is only required with MANDIK control systems.
- Max terminal size in MDCM 2.5mm^2

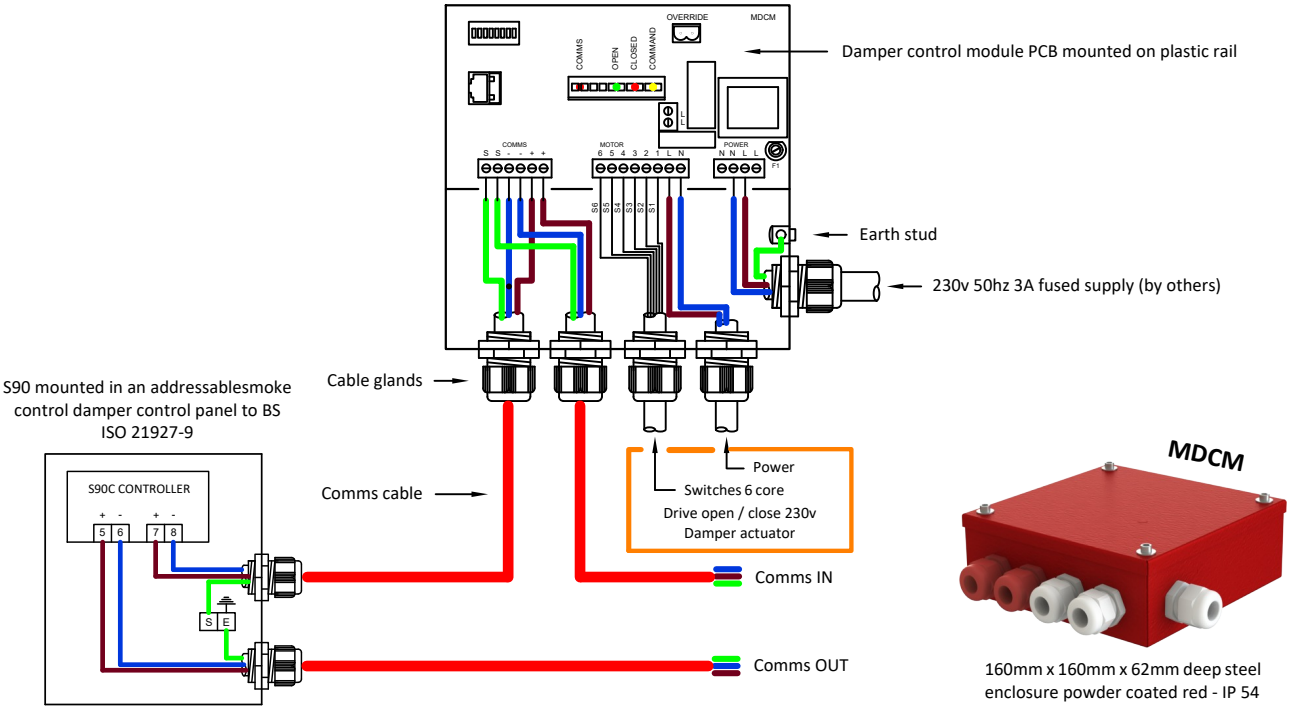

160mm x 160mm x 62mm deep steel enclosure powder coated red - IP 54

III. DIMENSIONS

FDMB with manual control

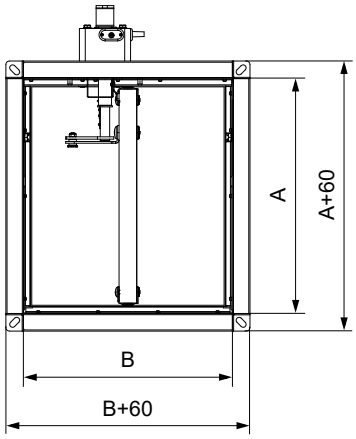

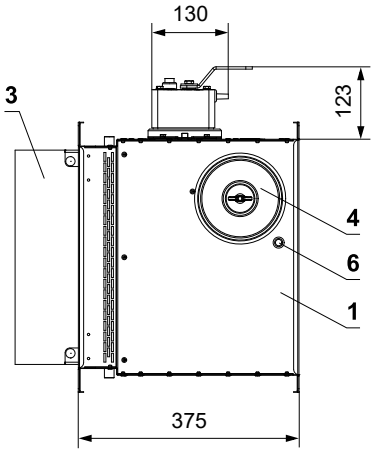

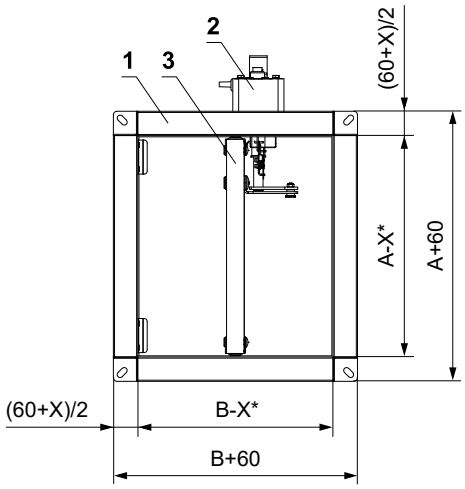

* X=14 (A<160 or B<160)
* X=23 (AxB≤500x400)
* X=36 (AxB>500x400)

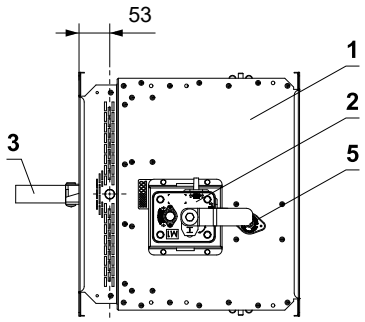

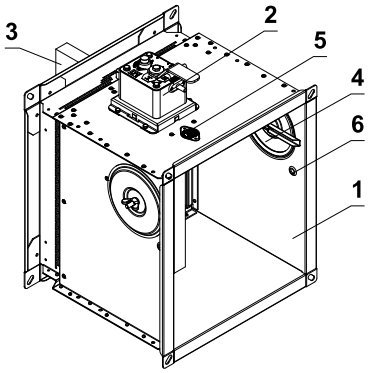

1 Damper casing
2 Manual control
3 Damper blade
4 Inspection opening cover
5 Sensor sticker
6 Hole for camera

FDMB with spring return actuator

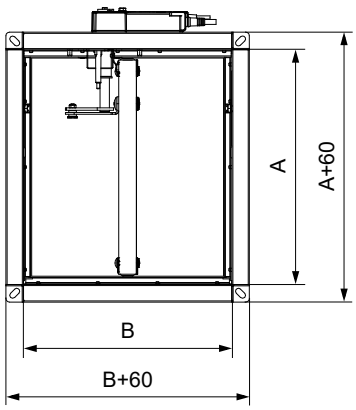

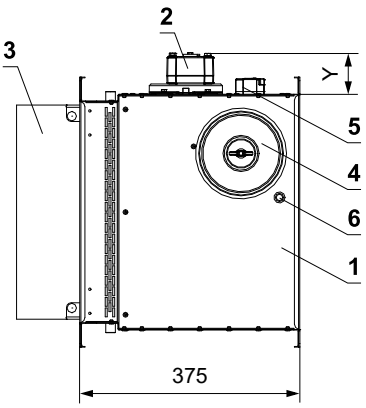

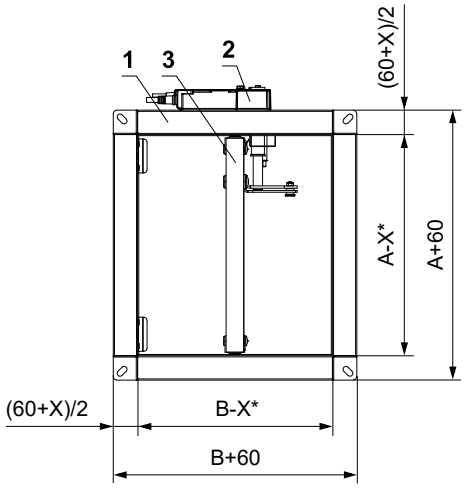

* X=14 (A<160 or B<160)
* X=23 (AxB≤500x400)
* X=36 (AxB>500x400)

Y=72 mm (BFL)
Y=76 mm (BFN)
Y=83 mm (BF)

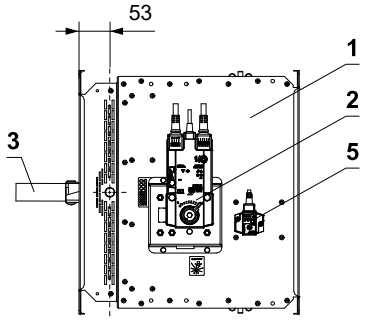

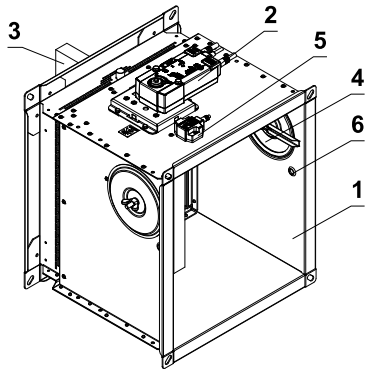

1 Damper casing
2 Spring return actuator
3 Damper blade
4 Inspection opening cover
5 Thermoelectric activation device
6 Hole for camera

Damper blade overlaps

- Open damper blade overlaps the damper casing by the value “a” or “c”. These values are specified in chapter Technical parameters → see pages 14 to 19

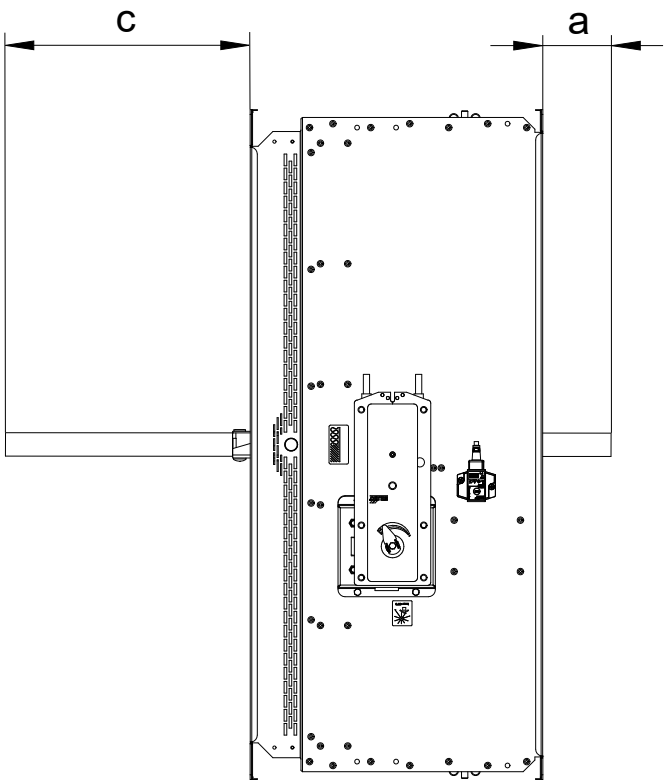

Values "a" and "c" has to be respected when projecting related air-conditioning ducts.

Flange of a damper - CONTROL SIDE

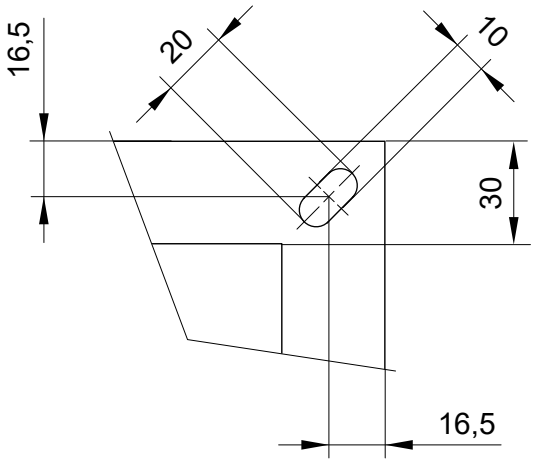

Flange of a damper - INSTALLATION SIDE

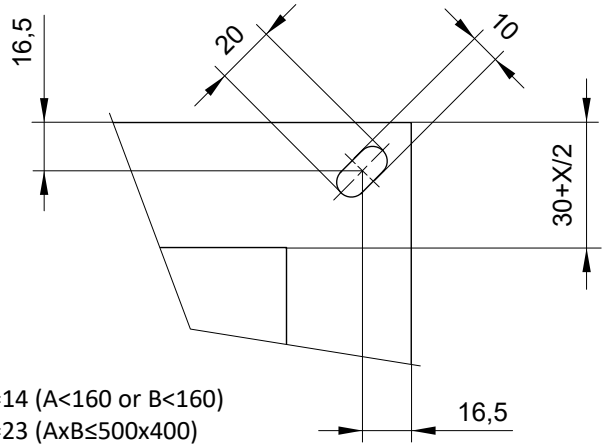

X=14 (A<160 or B<160)
X=23 (AxB≤500x400)
X=36 (AxB>500x400)

30 mm wide flanges are fitted with oval holes in the corners

Technical parameters

A x B [mm]		Damper blade overlaps a [mm]	Damper blade overlaps c [mm]	Weight Man. [kg]	Weight Actu. [kg]	Free area S_f [m²]	Spring return actuator	Manual control
100 x	100	-	-	4,9	5,1	0,0030	BFL	M2
	110	-	-	4,9	5,1	0,0037		
	125	-	-	5	5,2	0,0048		
	140	-	5	5,1	5,3	0,0059		
	150	-	10	5,2	5,4	0,0066		
	160	-	15	5,2	5,4	0,0073		
	180	-	25	5,4	5,6	0,0088		
	200	-	35	5,5	5,7	0,0102		
	225	-	47	5,7	5,8	0,0120		
	250	-	60	5,8	6	0,0138		
	280	-	75	6	6,2	0,0160		
110 x	100	-	-	4,9	5,1	0,0034	BFL	M2
	110	-	-	5	5,2	0,0043		
	125	-	-	5,1	5,3	0,0055		
	140	-	5	5,2	5,4	0,0067		
	150	-	10	5,3	5,5	0,0075		
	160	-	15	5,3	5,5	0,0084		
	180	-	25	5,5	5,7	0,0100		
	200	-	35	5,6	5,8	0,0116		
	225	-	47	5,8	6	0,0137		
	250	-	60	6	6,1	0,0157		
	280	-	75	6,2	6,3	0,0182		
125 x	100	-	-	5	5,2	0,0041	BFL	M2
	110	-	-	5,1	5,3	0,0050		
	125	-	-	5,2	5,4	0,0065		
	140	-	5	5,3	5,5	0,0080		
	150	-	10	5,4	5,6	0,0089		
	160	-	15	5,5	5,7	0,0099		
	180	-	25	5,7	5,8	0,0118		
	200	-	35	5,8	6	0,0138		
	225	-	47	6	6,2	0,0162		
	250	-	60	6,2	6,3	0,0186		
	280	-	75	6,4	6,6	0,0215		
140 x	100	-	-	5,1	5,3	0,0047	BFL	M2
	110	-	-	5,2	5,4	0,0058		
	125	-	-	5,3	5,5	0,0075		
	140	-	5	5,5	5,6	0,0092		
	150	-	10	5,6	5,7	0,0103		
	160	-	15	5,6	5,8	0,0114		
	180	-	25	5,8	6	0,0137		
	200	-	35	6	6,2	0,0159		
	225	-	47	6,2	6,4	0,0187		
	250	-	60	6,4	6,6	0,0215		
	280	-	75	6,7	6,8	0,0249		
150 x	100	-	-	5,2	5,4	0,0051	BFL	M2
	110	-	-	5,3	5,5	0,0063		
	125	-	-	5,4	5,6	0,0082		
	140	-	5	5,6	5,7	0,0100		
	150	-	10	5,7	5,8	0,0112		
	160	-	15	5,7	5,9	0,0124		
	180	-	25	5,9	6,1	0,0149		
	200	-	35	6,1	6,3	0,0173		
	225	-	47	6,4	6,5	0,0204		
150 x	250	-	60	6,6	6,7	0,0234	BFL	M2
	280	-	75	6,9	7	0,0271		
160 x	100	-	-	5,2	5,4	0,0055	BFL	M2
	110	-	-	5,3	5,5	0,0069		
	125	-	-	5,5	5,7	0,0088		
	140	-	5	5,6	5,8	0,0108		
	150	-	10	5,7	5,9	0,0121		
	160	-	15	5,8	6	0,0113		
	180	-	25	6	6,2	0,0137		
	200	-	35	6,2	6,4	0,0161		
	225	-	47	6,5	6,6	0,0191		
	250	-	60	6,7	6,9	0,0222		
	280	-	75	7	7,1	0,0258		
	300	-	85	7,2	7,3	0,0282		
	315	-	92	7,4	7,5	0,0300		
	355	-	112	7,7	7,9	0,0349		
	400	-	135	8,2	8,3	0,0403		
	450	-	150	8,6	8,7	0,0392		
	500	-	175	9,1	9,2	0,0446		
	550	-	200	9,6	9,7	0,0500		
	560	-	205	9,7	9,7	0,0511		
	600	-	225	10	10,1	0,0554		
	630	-	240	10,3	10,4	0,0586		
	650	-	250	10,5	10,6	0,0608		
	700	5	275	10,9	11	0,0662		
	710	10	280	11	11,1	0,0673		
	750	30	300	11,4	11,5	0,0716	BFN	
	800	55	325	11,8	11,9	0,0770		
	900	105	375	12,7	12,8	0,0878		
	1000	155	425	13,5	13,6	0,0986		
180 x	100	-	-	5,4	5,6	0,0064	BFL	M2
	110	-	-	5,5	5,7	0,0079		
	125	-	-	5,7	5,8	0,0102		
	140	-	5	5,8	6	0,0125		
	150	-	10	5,9	6,1	0,0140		
	160	-	15	6	6,2	0,0131		
	180	-	25	6,3	6,4	0,0159		
	200	-	35	6,5	6,6	0,0187		
	225	-	47	6,8	6,9	0,0222		
	250	-	60	7	7,2	0,0258		
	280	-	75	7,4	7,5	0,0300		
	300	-	85	7,6	7,7	0,0328		
	315	-	92	7,7	7,8	0,0349		
	355	-	112	8,2	8,3	0,0406		
	400	-	135	8,6	8,7	0,0469		
	450	-	150	9,2	9,3	0,0465		
	500	-	175	9,7	9,8	0,0529		
	550	-	200	10,2	10,3	0,0593		
	560	-	205	10,3	10,4	0,0605		
	600	-	225	10,7	10,8	0,0657		
	630	-	240	11	11,1	0,0695		
	650	-	250	11,2	11,3	0,0721		
	700	5	275	11,7	11,8	0,0785	BFN	

Sizes listed within the maximum/minimum sizes can be manufactured on request.

A x B [mm]		Damper blade overlaps		Weight		Free area S_f [m²]	Spring return actuator	Manual control
		a [mm]	c [mm]	Man. [kg]	Actu. [kg]			
180 x	710	10	280	11,8	11,9	0,0797	BFN	M2
	750	30	300	12,2	12,3	0,0849		
	800	55	325	12,7	12,8	0,0913		
	900	105	375	13,6	13,7	0,1041		
	1000	155	425	14,6	14,7	0,1169		
200 x	100	-	-	5,5	5,7	0,0072	BFL	M2
	110	-	-	5,6	5,8	0,0089		
	125	-	-	5,8	6	0,0115		
	140	-	5	6	6,2	0,0141		
	150	-	10	6,1	6,3	0,0158		
	160	-	15	6,2	6,4	0,0149		
	180	-	25	6,5	6,6	0,0181		
	200	-	35	6,7	6,9	0,0213		
	225	-	47	7	7,2	0,0253		
	250	-	60	7,3	7,5	0,0294		
	280	-	75	7,7	7,8	0,0342		
	300	-	85	7,9	8	0,0374		
	315	-	92	8,1	8,2	0,0398		
	355	-	112	8,6	8,7	0,0463		
	400	-	135	9,1	9,2	0,0535		
	450	-	150	9,7	9,8	0,0537		
	500	-	175	10,3	10,3	0,0611		
	550	-	200	10,8	10,9	0,0685		
	560	-	205	10,9	11	0,0700		
	600	-	225	11,4	11,5	0,0759		
	630	-	240	11,7	11,8	0,0804		
	650	-	250	11,9	12	0,0833		
	700	5	275	12,5	12,6	0,0907	BFN	
	710	10	280	12,6	12,7	0,0922		
	750	30	300	13	13,1	0,0981		
	800	55	325	13,5	13,6	0,1055		
	900	105	375	14,6	14,7	0,1203		
	1000	155	425	15,6	15,7	0,1351		
225 x	100	-	-	5,7	5,8	0,0083	BFL	M2
	110	-	-	5,8	6	0,0102		
	125	-	-	6	6,2	0,0132		
	140	-	5	6,2	6,4	0,0162		
	150	-	10	6,4	6,5	0,0181		
	160	-	15	6,5	6,6	0,0171		
	180	-	25	6,8	6,9	0,0209		
	200	-	35	7	7,2	0,0246		
	225	-	47	7,4	7,5	0,0292		
	250	-	60	7,7	7,8	0,0339		
	280	-	75	8,1	8,2	0,0395		
	300	-	85	8,4	8,5	0,0432		
	315	-	92	8,6	8,7	0,0460		
	355	-	112	9,1	9,2	0,0534		
	400	-	135	9,7	9,8	0,0618		
	450	-	150	10,3	10,4	0,0628		
	500	-	175	11	11,1	0,0714		
	550	-	200	11,6	11,7	0,0801		
	560	-	205	11,7	11,8	0,0818		
	600	-	225	12,2	12,3	0,0887	BFN	
	630	-	240	12,6	12,6	0,0939		
	650	-	250	12,8	12,9	0,0974		
	700	5	275	13,4	13,5	0,1060		

A x B [mm]		Damper blade overlaps		Weight		Free area S_f [m²]	Spring return actuator	Manual control
		a [mm]	c [mm]	Man. [kg]	Actu. [kg]			
225 x	710	10	280	13,5	13,6	0,1078	BFN	M2
	750	30	300	14	14,1	0,1147		
	800	55	325	14,6	14,7	0,1233		
	900	105	375	15,7	15,9	0,1406		M3
	1000	155	425	16,8	17	0,1579	BF	
250 x	100	-	-	5,8	6	0,0093	BFL	M2
	110	-	-	6	6,1	0,0115		
	125	-	-	6,2	6,3	0,0149		
	140	-	5	6,4	6,6	0,0182		
	150	-	10	6,6	6,7	0,0204		
	160	-	15	6,7	6,9	0,0194		
	180	-	25	7	7,2	0,0236		
	200	-	35	7,3	7,5	0,0278		
	225	-	47	7,7	7,8	0,0331		
	250	-	60	8,1	8,2	0,0384		
	280	-	75	8,5	8,6	0,0447		
	300	-	85	8,8	8,9	0,0489		
	315	-	92	9	9,1	0,0521		
	355	-	112	9,6	9,7	0,0605		
	400	-	135	10,3	10,3	0,0700		
	450	-	150	11	11,1	0,0719		
	500	-	175	11,7	11,7	0,0818		
	550	-	200	12,3	12,4	0,0917		
	560	-	205	12,5	12,6	0,0937		
	600	-	225	13	13,1	0,1016	BFN	
	630	-	240	13,4	13,5	0,1075		
	650	-	250	13,7	13,8	0,1115		
	700	5	275	14,3	14,4	0,1214		
	710	10	280	14,4	14,6	0,1234		
	750	30	300	14,9	15,1	0,1313		M3
	800	55	325	15,6	15,7	0,1412		
	900	105	375	16,8	17	0,1610		
	1000	155	425	17,9	18,3	0,1808	BF	
280 x	100	-	-	6	6,2	0,0106	BFL	M2
	110	-	-	6,2	6,3	0,0131		
	125	-	-	6,4	6,6	0,0169		
	140	-	5	6,7	6,8	0,0207		
	150	-	10	6,9	7	0,0232		
	160	-	15	7	7,1	0,0221		
	180	-	25	7,4	7,5	0,0269		
	200	-	35	7,7	7,8	0,0317		
	225	-	47	8,1	8,2	0,0377		
	250	-	60	8,5	8,6	0,0438		
	280	-	75	9	9,1	0,0510		
	300	-	85	9,3	9,4	0,0558		
	315	-	92	9,6	9,7	0,0594		
	355	-	112	10,2	10,3	0,0691		
	400	-	135	10,9	11	0,0799		
	450	-	150	11,7	11,8	0,0828		
	500	-	175	12,5	12,6	0,0942		
	550	-	200	13,2	13,3	0,1056		
	560	-	205	13,4	13,5	0,1078		
	600	-	225	13,9	14,1	0,1170		
	630	-	240	14,4	14,5	0,1238	BFN	
	650	-	250	14,7	14,8	0,1284		
	700	5	275	15,4	15,5	0,1398		

Sizes listed within the maximum/minimum sizes can be manufactured on request.

A x B [mm]		Damper blade overlaps		Weight		Free area S_f [m²]	Spring return actuator	Manual control
		a [mm]	c [mm]	Man. [kg]	Actu. [kg]			
280 x	710	10	280	15,5	15,7	0,1420	BFN	M2
	750	30	300	16	16,3	0,1512		M3
	800	55	325	16,7	17	0,1626		
	900	105	375	18	18,4	0,1854	BF	
	1000	155	425	19,3	19,8	0,2082		
300 x	100	-	-	6,1	6,3	0,0114	BFL	M2
	110	-	-	6,3	6,4	0,0141		
	125	-	-	6,6	6,7	0,0182		
	140	-	5	6,9	7	0,0223		
	150	-	10	7	7,2	0,0250		
	160	-	15	7,2	7,3	0,0239		
	180	-	25	7,6	7,7	0,0291		
	200	-	35	7,9	8	0,0343		
	225	-	47	8,4	8,5	0,0408		
	250	-	60	8,8	8,9	0,0474		
	280	-	75	9,3	9,4	0,0552		
	300	-	85	9,7	9,8	0,0604		
	315	-	92	10,0	10,1	0,0643		
	355	-	112	10,6	10,7	0,0748		
	400	-	135	11,4	11,5	0,0865		
	450	-	150	12,2	12,3	0,0900		
	500	-	175	13	13,1	0,1024		
	550	-	200	13,8	13,9	0,1148	BFN	
	560	-	205	13,9	14,1	0,1173		
	600	-	225	14,6	14,7	0,1272		
	630	-	240	15	15,2	0,1347		
	650	-	250	15,3	15,5	0,1396		
	700	5	275	16	16,3	0,1520		
	710	10	280	16,2	16,4	0,1545		
	750	30	300	16,8	17	0,1644		M3
	800	55	325	17,5	17,8	0,1768		
	900	105	375	18,8	19,3	0,2016	BF	
	1000	155	425	20,1	20,7	0,2264		
315 x	100	-	-	6,2	6,4	0,0121	BFL	M2
	110	-	-	6,4	6,5	0,0149		
	125	-	-	6,7	6,8	0,0192		
	140	-	5	7	7,1	0,0235		
	150	-	10	7,2	7,3	0,0264		
	160	-	15	7,4	7,5	0,0252		
	180	-	25	7,7	7,8	0,0308		
	200	-	35	8,1	8,2	0,0363		
	225	-	47	8,6	8,7	0,0432		
	250	-	60	9	9,1	0,0501		
	280	-	75	9,6	9,7	0,0584		
	300	-	85	10	10,1	0,0639		
	315	-	92	10,2	10,3	0,0680		
	355	-	112	10,9	11	0,0791		
	400	-	135	11,7	11,8	0,0915		
	450	-	150	12,6	12,6	0,0955		
	500	-	175	13,4	13,5	0,1086		
	550	-	200	14,2	14,3	0,1218	BFN	
	560	-	205	14,4	14,5	0,1244		
	600	-	225	15	15,2	0,1349		
	630	-	240	15,5	15,7	0,1428		
	650	-	250	15,8	16	0,1481		
	700	5	275	16,6	16,8	0,1612		

A x B [mm]		Damper blade overlaps		Weight		Free area S_f [m²]	Spring return actuator	Manual control
		a [mm]	c [mm]	Man. [kg]	Actu. [kg]			
315 x	710	10	280	16,7	17	0,1638	BFN	M2
	750	30	300	17,3	17,6	0,1744		M3
	800	55	325	18	18,4	0,1875		
	900	105	375	19,4	19,9	0,2138	BF	
	1000	155	425	20,7	21,4	0,2401		
355 x	100	-	-	6,5	6,6	0,0137	BFL	M2
	110	-	-	6,7	6,8	0,0170		
	125	-	-	7	7,1	0,0219		
	140	-	5	7,3	7,4	0,0268		
	150	-	10	7,5	7,6	0,0301		
	160	-	15	7,7	7,9	0,0288		
	180	-	25	8,2	8,3	0,0352		
	200	-	35	8,6	8,7	0,0415		
	225	-	47	9,1	9,2	0,0494		
	250	-	60	9,6	9,7	0,0573		
	280	-	75	10,2	10,3	0,0668		
	300	-	85	10,6	10,7	0,0731		
	315	-	92	10,9	11	0,0778		
	355	-	112	11,7	11,8	0,0905		
	400	-	135	12,6	12,7	0,1047		
	450	-	150	13,5	13,6	0,1100		
	500	-	175	14,4	14,6	0,1251	BFN	
	550	-	200	15,3	15,5	0,1403		
	560	-	205	15,5	15,7	0,1433		
	600	-	225	16,2	16,4	0,1554		
	630	-	240	16,7	17	0,1645		
	650	-	250	17	17,3	0,1706		
	700	5	275	17,9	18,2	0,1857		
	710	10	280	18	18,4	0,1888		
	750	30	300	18,7	19,1	0,2009		M3
	800	55	325	19,4	20	0,2160		
	900	105	375	20,9	21,6	0,2463	BF	
	1000	155	425	22,3	23,3	0,2766		
400 x	100	-	-	6,7	6,9	0,0156	BFL	M2
	110	-	-	7	7,1	0,0193		
	125	-	-	7,3	7,5	0,0249		
	140	-	5	7,7	7,8	0,0305		
	150	-	10	7,9	8	0,0342		
	160	-	15	8,2	8,3	0,0329		
	180	-	25	8,6	8,7	0,0401		
	200	-	35	9,1	9,2	0,0473		
	225	-	47	9,7	9,8	0,0563		
	250	-	60	10,3	10,3	0,0654		
	280	-	75	10,9	11	0,0762		
	300	-	85	11,4	11,5	0,0834		
	315	-	92	11,7	11,8	0,0888		
	355	-	112	12,6	12,7	0,1033		
	400	-	135	13,5	13,6	0,1195		
	450	-	150	14,6	14,7	0,1263		
	500	-	175	15,6	15,7	0,1437	BFN	
	550	-	200	16,5	16,8	0,1611		
	560	-	205	16,7	17	0,1646		
	600	-	225	17,5	17,8	0,1785		
	630	-	240	18	18,4	0,1890		
	650	-	250	18,4	18,8	0,1959		
	700	5	275	19,3	19,8	0,2133		

Sizes listed within the maximum/minimum sizes can be manufactured on request.

A x B [mm]		Damper blade overlaps		Weight		Free area S_f [m²]	Spring return actuator	Manual control
		a [mm]	c [mm]	Man. [kg]	Actu. [kg]			
400 x	710	10	280	19,4	20	0,2168	BFN	M2
	750	30	300	20,1	20,7	0,2307	BF	M3
	800	55	325	20,9	21,7	0,2481		
	900	105	375	22,5	23,5	0,2829		
	1000	155	425	23,9	25,2	0,3177		
450 x	125	-	-	7,7	7,8	0,0283	BFL	M2
	140	-	5	8,1	8,2	0,0346		
	150	-	10	8,4	8,5	0,0388		
	160	-	15	8,6	8,7	0,0374		
	180	-	25	9,2	9,3	0,0456		
	200	-	35	9,7	9,8	0,0538		
	225	-	47	10,3	10,4	0,0641		
	250	-	60	11	11,1	0,0744		
	280	-	75	11,7	11,8	0,0867		
	300	-	85	12,2	12,3	0,0949		
	315	-	92	12,6	12,6	0,1011		
	355	-	112	13,5	13,6	0,1175		
	400	-	135	14,6	14,7	0,1360		
	450	-	150	15,7	15,9	0,1445	BFN	
	500	-	175	16,8	17	0,1644		
	550	-	200	17,8	18,2	0,1843		
	560	-	205	18	18,4	0,1883		
	600	-	225	18,8	19,3	0,2042		
	630	-	240	19,4	19,9	0,2161		
	650	-	250	19,8	20,4	0,2241		
	700	5	275	20,7	21,4	0,2440	BF	M2
	710	10	280	20,9	21,6	0,2480		
	750	30	300	21,6	22,5	0,2639		M3
	800	55	325	22,5	23,5	0,2838		
	900	105	375	24,1	25,4	0,3236		
	1000	155	425	25,6	27,3	0,3634		
500 x	125	-	-	8,1	8,2	0,0316	BFL	M2
	140	-	5	8,5	8,6	0,0387		
	150	-	10	8,8	8,9	0,0434		
	160	-	15	9,1	9,2	0,0419		
	180	-	25	9,7	9,8	0,0511		
	200	-	35	10,3	10,3	0,0603		
	225	-	47	11	11,1	0,0718		
	250	-	60	11,7	11,7	0,0834		
	280	-	75	12,5	12,6	0,0972		
	300	-	85	13	13,1	0,1064		
	315	-	92	13,4	13,5	0,1133		
	355	-	112	14,4	14,6	0,1318		
	400	-	135	15,6	15,7	0,1525		
	450	-	150	16,8	17	0,1626	BFN	
	500	-	175	17,9	18,3	0,1850		
	550	-	200	19	19,5	0,2074		
	560	-	205	19,3	19,8	0,2119		
	600	-	225	20,1	20,7	0,2298		
	630	-	240	20,7	21,4	0,2433		
	650	-	250	21,1	21,9	0,2522	BF	
	700	5	275	22,1	23	0,2746		
	710	10	280	22,3	23,3	0,2791		
	750	30	300	23,1	24,1	0,2970		M3
	800	55	325	23,9	25,2	0,3194		
	900	105	375	25,6	27,3	0,3642		

A x B [mm]		Damper blade overlaps		Weight		Free area S_f [m²]	Spring return actuator	Manual control
		a [mm]	c [mm]	Man. [kg]	Actu. [kg]			
500 x	1000	155	425	27	29,3	0,4090	BF	M3
550 x	125	-	-	8,5	8,5	0,0350	BFL	M2
	140	-	5	8,9	9	0,0428		
	150	-	10	9,3	9,3	0,0480		
	160	-	15	9,6	9,7	0,0364		
	180	-	25	10,2	10,3	0,0463		
	200	-	35	10,8	10,9	0,0563		
	225	-	47	11,6	11,7	0,0687		
	250	-	60	12,3	12,4	0,0812		
	280	-	75	13,2	13,3	0,0961		
	300	-	85	13,8	13,9	0,1061		
	315	-	92	14,2	14,3	0,1135		
	355	-	112	15,3	15,5	0,1335		
	400	-	135	16,5	16,8	0,1559	BFN	
	450	-	150	17,8	18,2	0,1808		
	500	-	175	19	19,5	0,2057		
	550	-	200	20,2	20,8	0,2306		
	560	-	205	20,5	21,1	0,2356		
	600	-	225	21,3	22,1	0,2555		
	630	-	240	22	22,9	0,2704	BF	M3
	650	-	250	22,4	23,4	0,2804		
	700	5	275	23,4	24,6	0,3053		
	710	10	280	23,6	24,8	0,3103		
	750	30	300	24,4	25,8	0,3302		
	800	55	325	25,3	26,9	0,3551		
	900	105	375	26,9	29,1	0,4049		
560 x	125	-	-	8,5	8,6	0,0356	BFL	M2
	140	-	5	9	9,1	0,0436		
	150	-	10	9,3	9,4	0,0489		
	160	-	15	9,7	9,7	0,0371		
	180	-	25	10,3	10,4	0,0472		
	200	-	35	10,9	11	0,0574		
	225	-	47	11,7	11,8	0,0701		
	250	-	60	12,5	12,6	0,0828		
	280	-	75	13,4	13,5	0,0980		
	300	-	85	13,9	14,1	0,1082		
	315	-	92	14,4	14,5	0,1158		
	355	-	112	15,5	15,7	0,1361		
	400	-	135	16,7	17	0,1590	BFN	
	450	-	150	18	18,4	0,1844		
	500	-	175	19,3	19,8	0,2098		
	550	-	200	20,5	21,1	0,2352		
	560	-	205	20,7	21,4	0,2403		
	600	-	225	21,6	22,4	0,2606		
	630	-	240	22,2	23,2	0,2758	BF	M3
	650	-	250	22,7	23,7	0,2860		
	700	5	275	23,7	24,9	0,3114		
	710	10	280	23,9	25,1	0,3165		
	750	30	300	24,6	26,1	0,3368		
	800	55	325	25,5	27,2	0,3622		
600 x	140	-	5	9,3	9,4	0,0469	BFL	M2
	150	-	10	9,7	9,8	0,0526		
	160	-	15	10	10,1	0,0400		
	180	-	25	10,7	10,8	0,0510		
	200	-	35	11,4	11,5	0,0619		
	225	-	47	12,2	12,3	0,0756		

Sizes listed within the maximum/minimum sizes can be manufactured on request.

A x B [mm]		Damper blade overlaps		Weight		Free area S_f [m²]	Spring return actuator	Manual control
		a [mm]	c [mm]	Man. [kg]	Actu. [kg]			
600 x	250	-	60	13	13,1	0,0893	BFL	M2
	280	-	75	13,9	14,1	0,1058		
	300	-	85	14,6	14,7	0,1167		
	315	-	92	15	15,2	0,1249		
	355	-	112	16,2	16,4	0,1469		
	400	-	135	17,5	17,8	0,1715	BFN	
	450	-	150	18,8	19,3	0,1989		
	500	-	175	20,1	20,7	0,2263		
	550	-	200	21,3	22,1	0,2537		
	560	-	205	21,6	22,4	0,2592		
	600	-	225	22,5	23,5	0,2811	BF	
	630	-	240	23,2	24,3	0,2976		
	650	-	250	23,6	24,8	0,3085		
	700	5	275	24,6	26,1	0,3359		
	710	10	280	24,8	26,3	0,3414		
	750	30	300	25,6	27,3	0,3633		M3
	800	55	325	26,5	28,5	0,3907		
630 x	140	-	5	9,6	9,7	0,0494	BFL	M2
	150	-	10	10	10,1	0,0554		
	160	-	15	10,3	10,4	0,0422		
	180	-	25	11	11,1	0,0538		
	200	-	35	11,7	11,8	0,0653		
	225	-	47	12,6	12,6	0,0798		
	250	-	60	13,4	13,5	0,0942		
	280	-	75	14,4	14,5	0,1116		
	300	-	85	15	15,2	0,1231		
	315	-	92	15,5	15,7	0,1318		
	355	-	112	16,7	17	0,1549		
	400	-	135	18	18,4	0,1809	BFN	
	450	-	150	19,4	19,9	0,2098		
	500	-	175	20,7	21,4	0,2387		
	550	-	200	22	22,9	0,2676		
	560	-	205	22,2	23,2	0,2734		
	600	-	225	23,2	24,3	0,2965	BF	
	630	-	240	23,8	25,1	0,3139		
	650	-	250	24,3	25,6	0,3254		
	700	5	275	25,3	26,9	0,3543		
	710	10	280	25,5	27,2	0,3601		
	750	30	300	26,3	28,2	0,3832		M3
650 x	140	-	5	9,8	9,8	0,0510	BFL	M2
	150	-	10	10,1	10,2	0,0572		
	160	-	15	10,5	10,6	0,0437		
	180	-	25	11,2	11,3	0,0556		
	200	-	35	11,9	12	0,0676		
	225	-	47	12,8	12,9	0,0825		
	250	-	60	13,7	13,8	0,0975		
	280	-	75	14,7	14,8	0,1154		
	300	-	85	15,3	15,5	0,1274		
	315	-	92	15,8	16	0,1363		
	355	-	112	17	17,3	0,1603		
	400	-	135	18,4	18,8	0,1872	BFN	
	450	-	150	19,8	20,4	0,2171		
	500	-	175	21,1	21,9	0,2470		
	550	-	200	22,4	23,4	0,2769		
	560	-	205	22,7	23,7	0,2829	BF	
	600	-	225	23,6	24,8	0,3068		
650 x	630	-	240	24,3	25,6	0,3247	BF	M2
	650	-	250	24,7	26,2	0,3367		
	700	5	275	25,7	27,5	0,3666		
	710	10	280	25,9	27,8	0,3726		
	750	30	300	26,7	28,8	0,3965		M3
700 x	150	-	10	10,5	10,6	0,0618	BFL	M2
	160	-	15	10,9	11	0,0473		
	180	-	25	11,7	11,8	0,0603		
	200	-	35	12,5	12,6	0,0732		
	225	-	47	13,4	13,5	0,0894		
	250	-	60	14,3	14,4	0,1056		
	280	-	75	15,4	15,5	0,1251		
	300	-	85	16	16,3	0,1380		
	315	-	92	16,6	16,8	0,1477		
	355	-	112	17,9	18,2	0,1737	BFN	
	400	-	135	19,3	19,8	0,2028		
	450	-	150	20,7	21,4	0,2352		
	500	-	175	22,1	23	0,2676		
	550	-	200	23,4	24,6	0,3000	BF	
	560	-	205	23,7	24,9	0,3065		
	600	-	225	24,6	26,1	0,3324		
	630	-	240	25,3	26,9	0,3519		
	650	-	250	25,7	27,5	0,3648		
	700	5	275	26,8	28,9	0,3972		
	710	10	280	27	29,2	0,4037		
710 x	150	-	10	10,6	10,7	0,0627	BFL	M2
	160	-	15	11	11,1	0,0480		
	180	-	25	11,8	11,9	0,0612		
	200	-	35	12,6	12,7	0,0744		
	225	-	47	13,5	13,6	0,0908		
	250	-	60	14,4	14,6	0,1073		
	280	-	75	15,5	15,7	0,1270		
	300	-	85	16,2	16,4	0,1402		
	315	-	92	16,7	17	0,1500		
	355	-	112	18	18,4	0,1763	BFN	
	400	-	135	19,4	20	0,2060		
	450	-	150	20,9	21,6	0,2389		
	500	-	175	22,3	23,3	0,2718		
	550	-	200	23,6	24,8	0,3047	BF	
	560	-	205	23,9	25,1	0,3112		
	600	-	225	24,8	26,3	0,3376		
	630	-	240	25,5	27,2	0,3573		
	650	-	250	25,9	27,8	0,3705		
	700	5	275	27	29,2	0,4034		
750 x	150	-	10	11	11,1	0,0664	BFL	M2
	160	-	15	11,4	11,5	0,0510		
	180	-	25	12,2	12,3	0,0649		
	200	-	35	13	13,1	0,0789		
	225	-	47	14	14,1	0,0963		
	250	-	60	14,9	15,1	0,1138		
	280	-	75	16	16,3	0,1347		
	300	-	85	16,8	17	0,1487		
	315	-	92	17,3	17,6	0,1591		
	355	-	112	18,7	19,1	0,1871	BFN	
	400	-	135	20,1	20,7	0,2185		
	450	-	150	21,6	22,5	0,2534		

Sizes listed within the maximum/minimum sizes can be manufactured on request.

A x B [mm]		Damper blade overlaps		Weight		Free area S_f [m²]	Spring return actuator	Manual control
		a [mm]	c [mm]	Man. [kg]	Actu. [kg]			
750 x	500	-	175	23,1	24,1	0,2883	BFN	M2
	550	-	200	24,4	25,8	0,3232	BF	
	560	-	205	24,6	26,1	0,3302		
	600	-	225	25,6	27,3	0,3581		
	630	-	240	26,3	28,2	0,3790		
	650	-	250	26,7	28,8	0,3930		
800 x	150	-	10	11,4	11,5	0,0710	BFL	M2
	160	-	15	11,8	11,9	0,0546		
	180	-	25	12,7	12,8	0,0696		
	200	-	35	13,5	13,6	0,0845		
	225	-	47	14,6	14,7	0,1032		
	250	-	60	15,6	15,7	0,1219		
	280	-	75	16,7	17	0,1444		
	300	-	85	17,5	17,8	0,1593		
	315	-	92	18	18,4	0,1705		
	355	-	112	19,4	20	0,2005	BFN	
	400	-	135	20,9	21,7	0,2341		
	450	-	150	22,5	23,5	0,2715		
	500	-	175	23,9	25,2	0,3089		
	550	-	200	25,3	26,9	0,3463	BF	
	560	-	205	25,5	27,2	0,3538		
	600	-	225	26,5	28,5	0,3837		
900 x	160	-	15	12,7	12,8	0,0619	BFL	M2
	180	-	25	13,6	13,7	0,0789		

A x B [mm]		Damper blade overlaps		Weight		Free area S_f [m²]	Spring return actuator	Manual control
		a [mm]	c [mm]	Man. [kg]	Actu. [kg]			
900 x	200	-	35	14,6	14,7	0,0958	BFL	M2
	225	-	47	15,7	15,9	0,1170		
	250	-	60	16,8	17	0,1382		
	280	-	75	18	18,4	0,1637		
	300	-	85	18,8	19,3	0,1806		
	315	-	92	19,4	19,9	0,1933	BFN	
	355	-	112	20,9	21,6	0,2273		
	400	-	135	22,5	23,5	0,2654		
	450	-	150	24,1	25,4	0,3078		
	500	-	175	25,6	27,3	0,3502	BF	
	550	-	200	26,9	29,1	0,3926		
1000 x	160	-	15	13,5	13,6	0,0692	BFL	M2
	180	-	25	14,6	14,7	0,0882		
	200	-	35	15,6	15,7	0,1071		
	225	-	47	16,8	17	0,1308		
	250	-	60	17,9	18,3	0,1545		
	280	-	75	19,3	19,8	0,1830		
	300	-	85	20,1	20,7	0,2019	BFN	
	315	-	92	20,7	21,4	0,2161		
	355	-	112	22,3	23,3	0,2541		
	400	-	135	23,9	25,2	0,2967		
	450	-	150	25,6	27,3	0,3441		
	500	-	175	27	29,3	0,3915	BF	

Sizes listed within the maximum/minimum sizes can be manufactured on request.

IV. INSTALLATION

Placement and installation

- The fire dampers are suitable for installation in arbitrary position in vertical and horizontal passages of fire separating constructions. The damper installation procedures must be done so that all load transfer from the fire separating constructions to the damper is absolutely excluded. Following air-conditioning duct must be suspended or supported so that all load transfer from the following duct to the fire damper is absolutely excluded. The gap between the installed damper and the fire separating construction must be perfectly filled with approved material.
- The damper must be installed so that the damper blade (in closed position) is situated in the fire separating construction - marked by the label BUILT-IN EDGE on the damper casing. If such solution is not possible, the duct between the fire separating construction and the damper blade must be protected according to the certified installation method → see pages 23 to 43
- During the installation and plastering process, the actuating mechanism must be protected (covered) against damage and pollution. The damper casing should not be deformed during bricking in. Once the damper is built in, the damper blade should not grind against the damper casing during opening or closing.
- The distance between the fire damper and the construction (wall, ceiling) must be 75 mm at the minimum, according to BS EN 1366-2. If two or more dampers are to be installed in one fire separating construction, the distance between adjacent dampers must be 200 mm at the minimum, according to BS EN 1366-2.

Minimum distance between the fire dampers and the construction

- minimum distance 200 mm between dampers, according to BS EN 1366-2
- minimum distance 75 mm between damper and construction (wall/ceiling), according to BS EN 1366-2
- recommended minimum distance 150 mm necessary for access to the actuator
- recommended minimum distance 250 mm necessary for access to the manual control

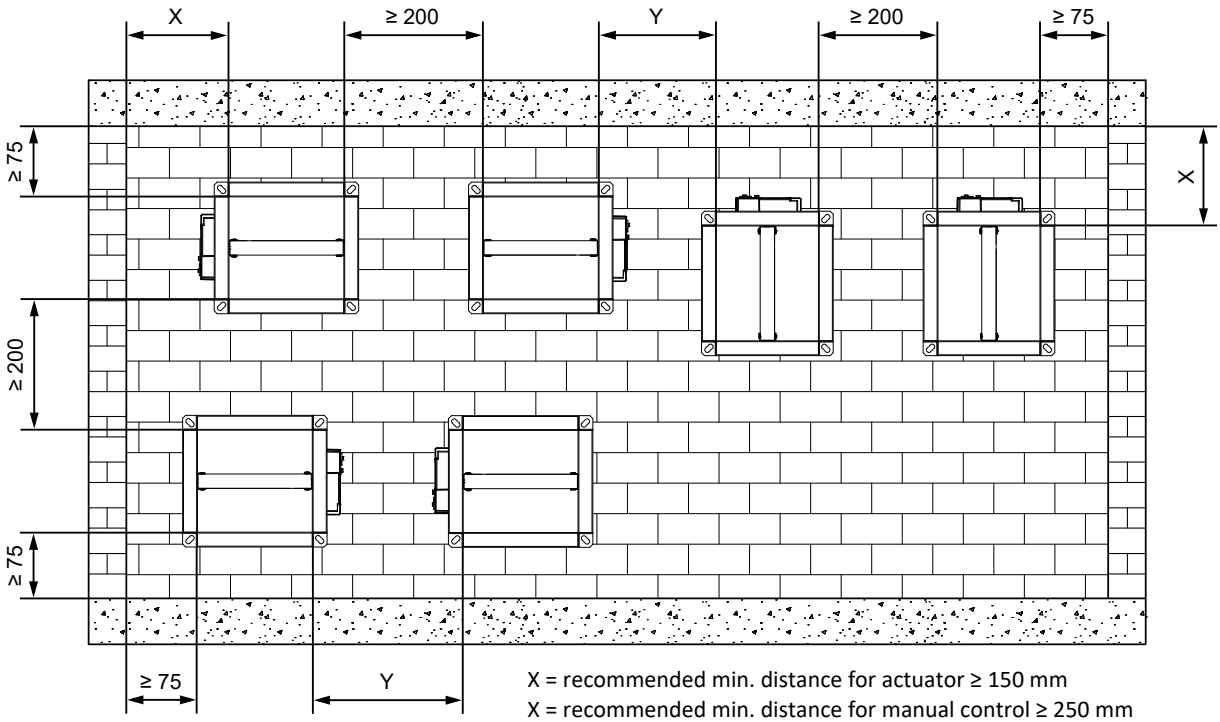

X = recommended min. distance for actuator ≥ 150 mm
X = recommended min. distance for manual control ≥ 250 mm

Y = min. distance for actuator ≥ 200 mm acc. to BS EN 1366-2
Y = recommended min. distance for manual control ≥ 250 mm

- Always consult the wall manufacturers specific guidelines for deflection heads, penetration size, location to other services, fire stopping and load bearing capacity.
- No other services should pass through the dampers building work opening.
- For lightweight walls always consult the wall manufacturer specific guidelines for penetrations sizes and distances.

Built in edge

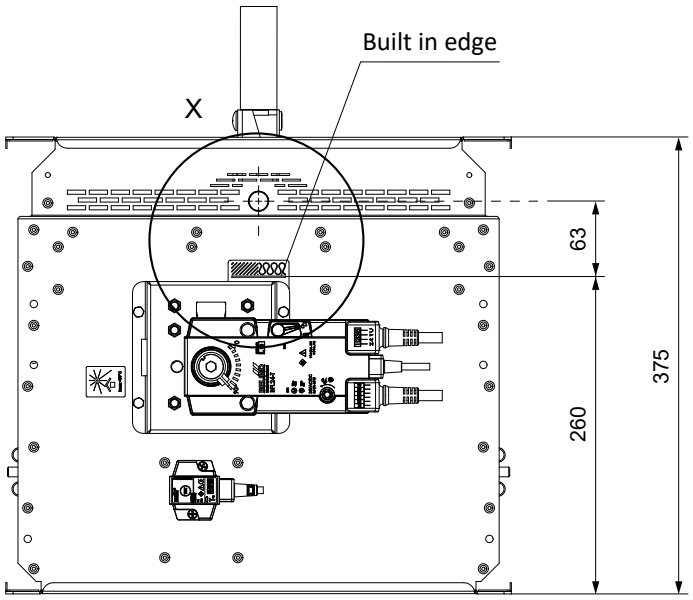

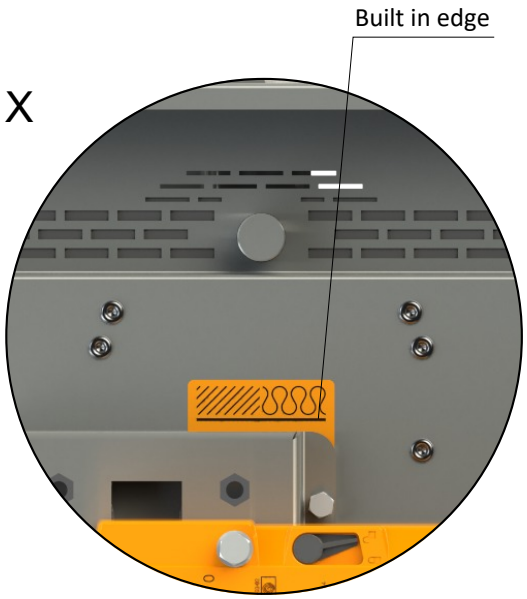

Dimensions of an installation opening

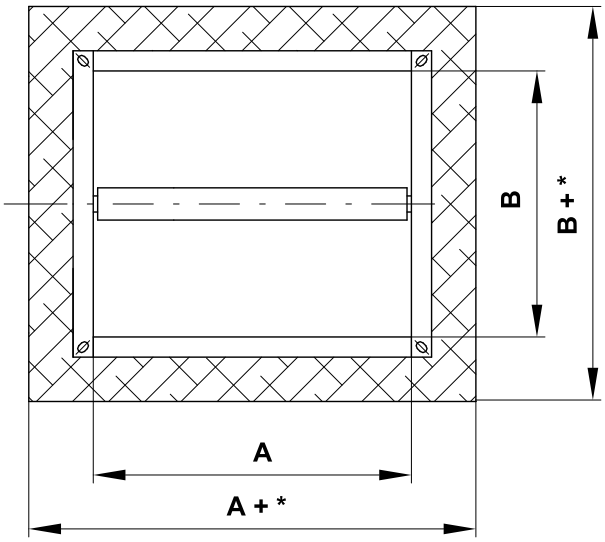

*** Mortar or gypsum**

- min. A(B)+100
- max. A(B)+300

*** Ablative Coated Batt, damper in solid/CLT/ceiling/CLT ceiling construction**

- min. A(B)+80
- max. A(B)+400

*** Ablative Coated Batt, damper outside construction EI 90**

- min. A(B)+80
- max. A(B)+200

*** Ablative Coated Batt, damper in gypsum wall construction min. EI 90**

- min. A(B)+80
- max. A(B)+400

*** Ablative Coated Batt, damper in gypsum wall construction min. EI 60**

- min. A(B)+80
- max. A(B)+260

*** Ablative Coated Batt, damper in gypsum wall construction min. EI 30**

- min. A(B)+80
- max. A(B)+310

*** Ablative Coated Batt, damper in shaft wall construction**

- A(B)+100$^{+0/-20}$ for max. fire resistance of the installation **EI 90 S**
- min. A(B)+80 for max. fire resistance of the installation **EI 60 S**
- max. A(B)+260 for max. fire resistance of the installation **EI 60 S**

Statement of installations

Fire separating construction, location of the damper	Installation type, installation system	Gap width [mm]	Fire resistance	Page
Standard low- and high-density rigid wall construction according to EN 1363-1 ● damper in the wall ● 100 mm min. wall thickness	Mortar or gypsum	50–150	EI 120 (v_e) S [V/H] *	23
	Ablative Coated Batt	40–200	EI 90 (v_e) S [V/H]	24
Standard low- and high-density rigid wall construction according to EN 1363-1 ● damper remote from the wall ● 100 mm min. wall thickness	Insulation of the duct with ISOVER ULTIMATE PROTECT th. 120 mm (2x60) – Ablative Coated Batt	40–100	EI 90 (v_e) S [V/H]	25
Standard flexible wall construction min. EI 90 according to EN 1363-1 ● damper in the wall ● 100 mm min. wall thickness	Mortar or gypsum	50–150	EI 120 (v_e) S [V/H] *	26
	Ablative Coated Batt	40–200	EI 90 (v_e) S [V/H]	27
	Flexible ceiling - Installation frame E5	N/A		28-29
Standard flexible wall construction min. EI 60 according to EN 1363-1 ● damper in the wall ● 100 mm min. wall thickness	Mortar or gypsum	50–150	EI 60 (v_e) S [V/H]	30
	Ablative Coated Batt	40–130		31
Standard flexible wall construction min. EI 30 according to EN 1363-1 ● damper in the wall ● 75 mm min. wall thickness	Mortar or gypsum	50–150	EI 30 (v_e) S [V/H] EI 45 (v_e) S [V/H]	32
	Ablative Coated Batt	40–155		33
Standard flexible wall construction min. EI 90 according to EN 1363-1 ● damper remote from the wall ● 100 mm min. wall thickness	Insulation of the duct with ISOVER ULTIMATE PROTECT th. 120 mm (2x60) – Ablative Coated Batt	40–100	EI 90 (v_e) S [V/H]	34
Non-standard CLT wooden wall construction min. REI 60 ● damper in the wall ● 100 mm min. wall thickness	Mortar or gypsum	50–150	EI 90 (v_e) S [V/H]	35
	Ablative Coated Batt	40–200		36
Non-standard lightweight wall construction ROCKWOLL Cavity Barrier EN ● damper in the wall ● 100 mm min. wall thickness	Detailed description of installation method → see page 37	N/A	EI 60 (v_e) S [V/H]	37
Non-standard asymm. shaft wall construction, min. EI 60, made of gypsum plasterboards (2×12,5 mm and 1×19 mm) with steel studs ● damper in the wall ● 85 mm min. wall thickness	Mortar or gypsum	50–150	EI 60 (v_e) S [V/H]	38
		50	EI 90 (v_e) S [V/H]	
	Ablative Coated Batt	40–130	EI 60 (v_e) S [V/H]	39
		100	EI 90 (v_e) S [V/H]	
Standard low- and high-density rigid floor construction according to EN 1366-2 ● damper in the ceiling ● 150 mm min. ceiling thickness	Mortar or gypsum	50–150	EI 90 (h_o) S [H] *	40
		50	EI 120 (h_o) S [H] *	
	Ablative Coated Batt	40–200	EI 90 (h_o) S [H]	41
Non-standard CLT wooden ceiling construction min. REI 60 ● damper in the ceiling ● 140 mm min. ceiling thickness	Mortar or gypsum	50–150	EI 90 (h_o) S [H]	42
	Ablative Coated Batt	40–200		43

* *Tested at increased underpressure of 500 Pa.*

In solid wall construction

In solid wall construction - mortar or gypsum

EI 120 (v_e) S [V/H] - 500 Pa

- Standard low- and high-density rigid wall construction according to EN 1363-1
- For connection following duct → see page 46
- This installation was tested without supports. Supports are optional, if are used, follow the manufacturer's instructions and national standards.

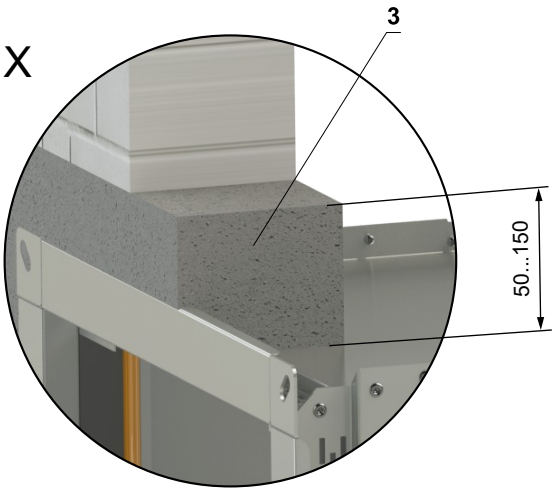

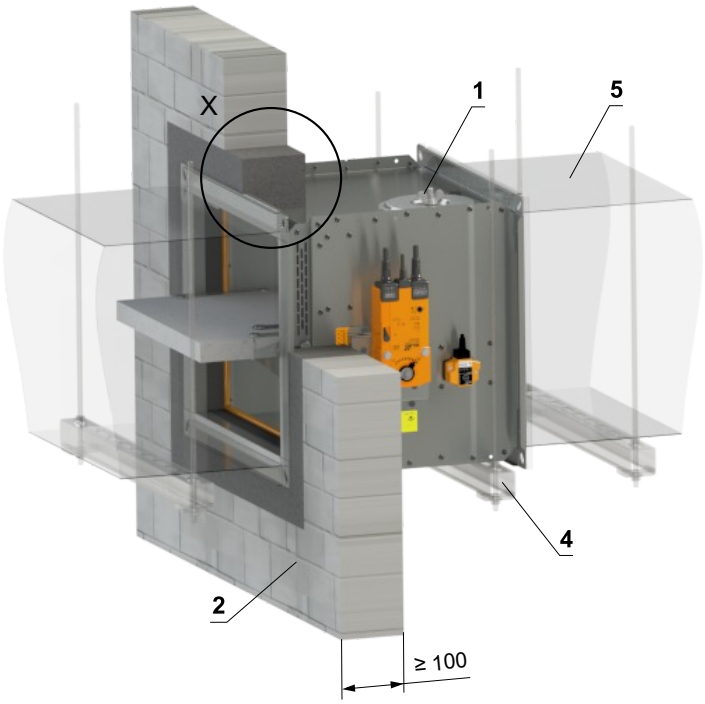

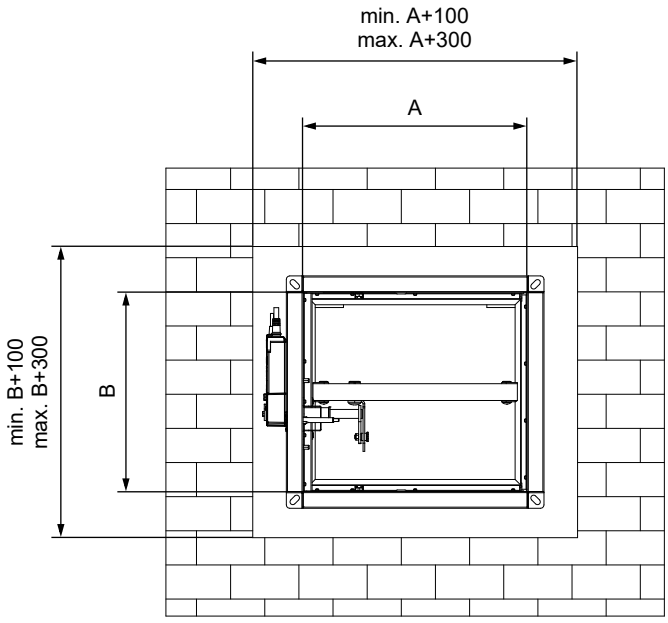

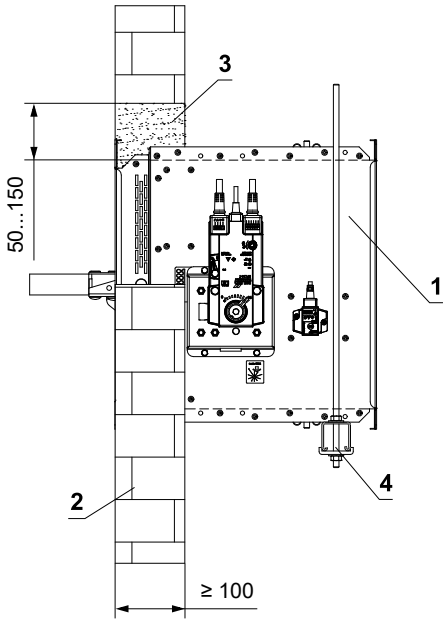

1 FDMB
2 Solid wall construction
3 British gypsum thistle bond 60 (or equivalent can be used) minimum density 670 kg/m³
4 Fixing profile with threaded rod → see pages 44 to 45
5 Duct

In solid wall construction - Ablative Coated Batt

EI 90 (v_e) S [V/H]

- Standard low- and high-density rigid wall construction according to EN 1363-1
- For connection following duct → see page 46

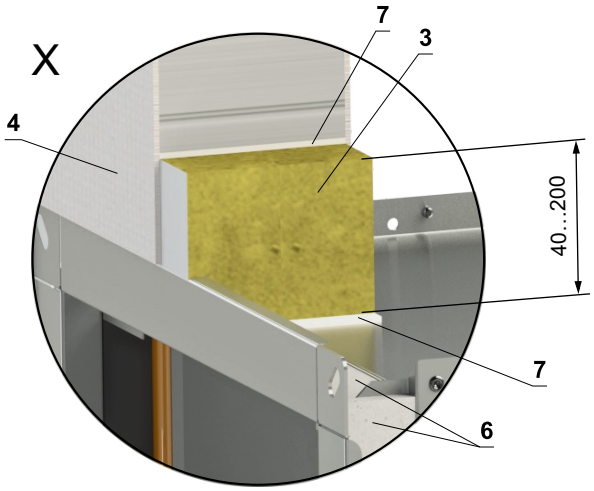

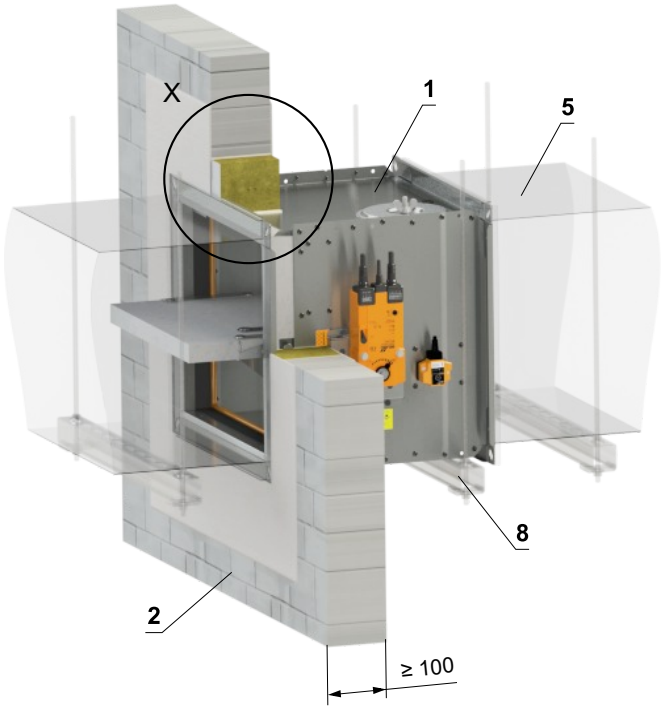

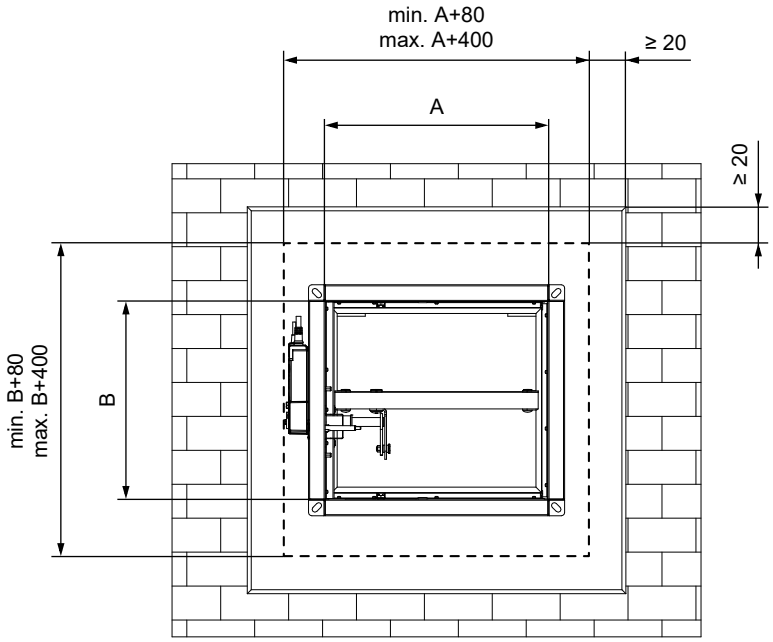

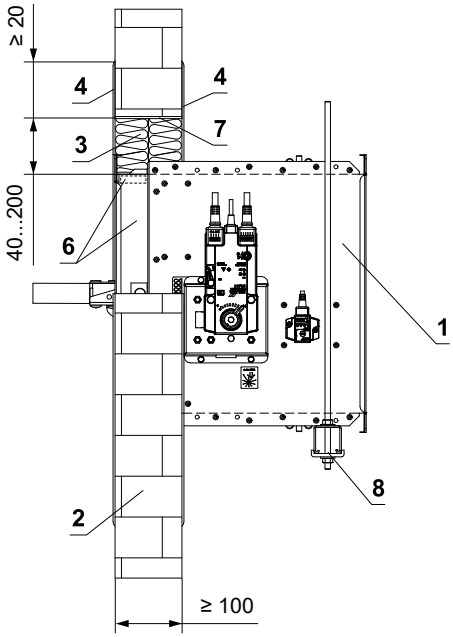

1 FDMB
2 Solid wall construction
3 Ablative Coated Batt (e.g. Firestop Board HILTI CFS-CT B 1S 140/50 - min. density 140 kg/m³ + Firestop acrylic sealant HILTI CFS-S ACR or equivalent)
4 Fire stop coating thickness 1 mm (e.g. HILTI CFS-CT, PROMASTOP-CC or equivalent)
5 Duct
6 Protective cladding boards - (not part of the damper) but must be used as part of the penetration filling → see page 55
7 Fire resistant mastic - fill the gap on both sides of the fire separation construction and around the perimeter of penetration and damper body. (e.g. HILTI CFS-S ACR)
8 Fixing profile with threaded rod → see pages 44 to 45

Installation outside solid wall construction

Outside solid wall construction - ISOVER Ultimate Protect - Ablative Coated Batt

EI 90 (v_e) S [V/H]

- Standard low- and high-density rigid wall construction according to EN 1363-1
- For connection of following duct → see page 46
- Minimum and maximum distance between the wall and fire damper is unlimited
- When installing the insulation, follow the ISOVER manufacturer's instructions
- The damper and the duct must be suspended separately
- The duct must be suspended on both sides of damper acc. to national rules
- Duct between fire damper and fire separating construction must be suspended by using threaded rods and mounting profiles, or another mounting system acc. to national standards
- Load of the suspension system depends on weight of the fire damper and duct system → see page 44
- Max. distance between two suspension systems is 1500 mm
- Duct at the point of penetration must be fixed to the fire separation structure
- Following air-conditioning duct must be suspended or supported so that all load transfer from the following duct to the fire damper is absolutely excluded. Adjacent duct must be suspended or supported, as required by the duct suppliers
- Damper inspection holes are covered with insulation, therefore it's necessary to make an inspection hole on the connecting duct
- If the threaded rod is located inside the duct insulation, distance between threaded rod and duct is max 30 mm
- If the threaded rod is located outside the duct isolation, distance between threaded rod and isolation is max. 40 mm
- For this installation VRM2-B reinforcement frame must be used → see page 54

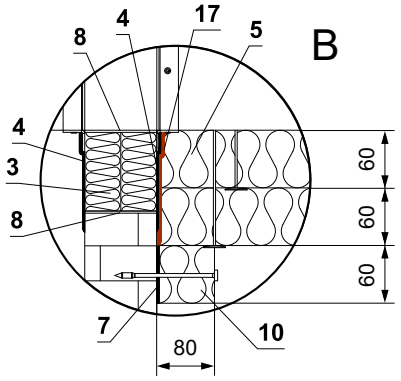

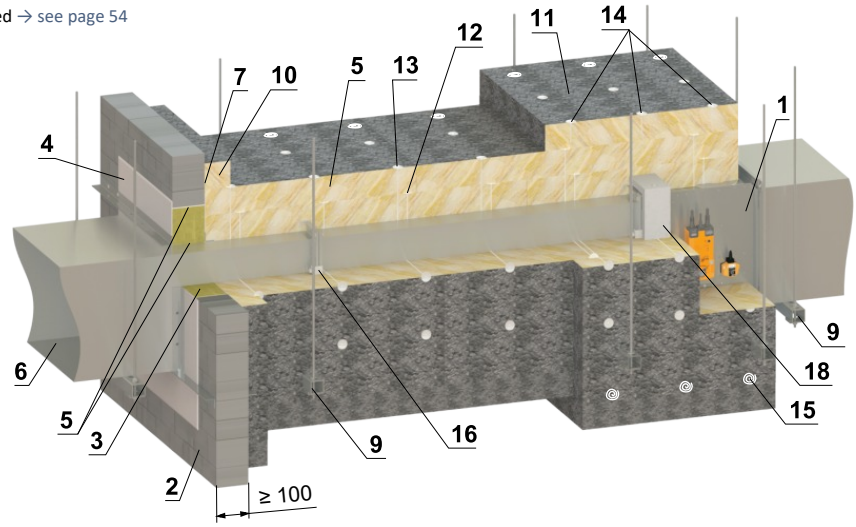

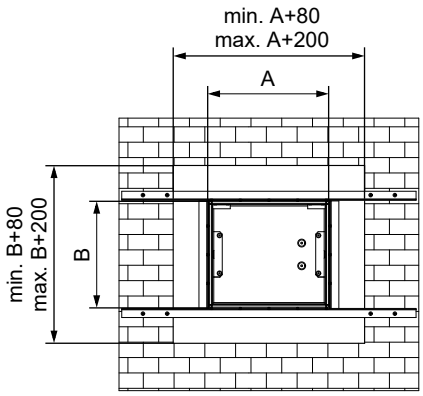

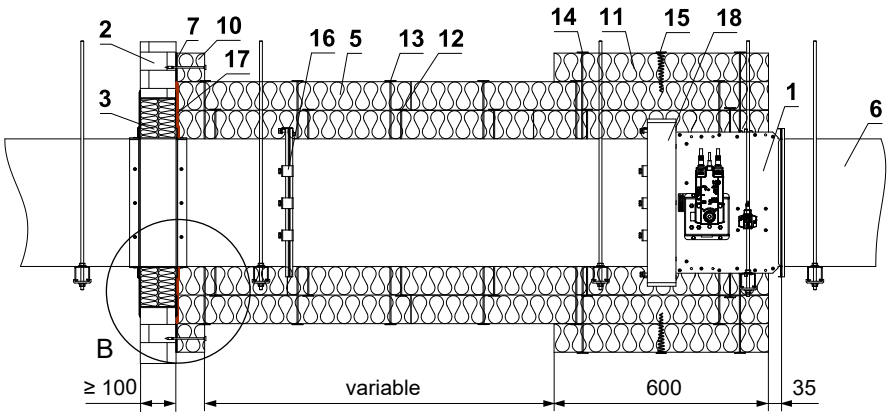

1 FDMB

2 Solid wall construction

3 Ablative Coated Batt (e.g. Firestop Board HILTI CFS-CT B 1S 140/50 - min. density 140 kg/m³ + Firestop acrylic sealant HILTI CFS-S ACR or equivalent)

4 Fire stop coating thickness 1 mm (e.g. HILTI CFS-CT, PROMASTOP-CC or equivalent)

5 Insulation board made of stone wool, with a surface treatment of aluminum foil, min. density 66 kg/m³ (ISOVER Ultimate Protect SLAB 4.0 Alu1, th. 60 mm)

6 Standard air ducts, made of galvanized sheet thickness 0,8 mm, flanges 30 mm, acc. to BS EN 1507 and DIN 24190 – the duct must be anchored on both sides of the fire-separating structure, e.g. using L-profiles 30 × 30 × 3 mm – according to the ISOVER manufacturer's instructions

7 ISOVER Protect BSK glue - apply on the insulation and stick it to the fire separation construction

8 Fire resistant mastic - fill the gap on both sides of the fire separation construction and around the perimeter of penetration and damper body. (e.g. HILTI CFS-S ACR)

9 Fixing profile with threaded rod → see pages 44 to 45

10 Duct penetration insulation collar - ISOVER Ultimate Protect SLAB 4.0 Alu1, th. 60 mm - glued (pos. 7) and fixed with screws to the wall construction

11 Insulating collar of the damper and duct connection - ISOVER Ultimate Protect SLAB 4.0 Alu1, th. 60 mm

12 Stud-welded pins 60 mm - quantity and placing acc. to ISOVER manufa.

13 Stud-welded pins 120 mm - quantity and placing acc. to ISOVER manufa.

14 Stud-welded pins 180 mm - quantity and placing acc. to ISOVER manufa.

15 Fire spiral shaped screws - quantity and placing acc. to ISOVER manufa.

16 Steel clamp min. M8 bolts

17 ISOVER Protect BSF

18 VRM2-B → see page 54

In gypsum wall construction

In gypsum wall construction min. EI 90 - mortar or gypsum

EI 120 (v_e) S [V/H] - 500 Pa

- Standard flexible wall construction min. EI 90 according to EN 1363-1.
- For connection following duct → see page 46
- This installation was tested without supports. Supports are optional, if are used, follow the manufacturer's instructions and national standards.
- The installation opening is lined with a UW/CW profile.

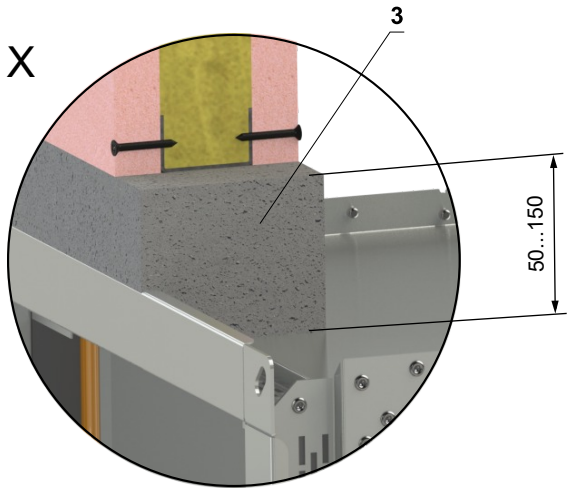

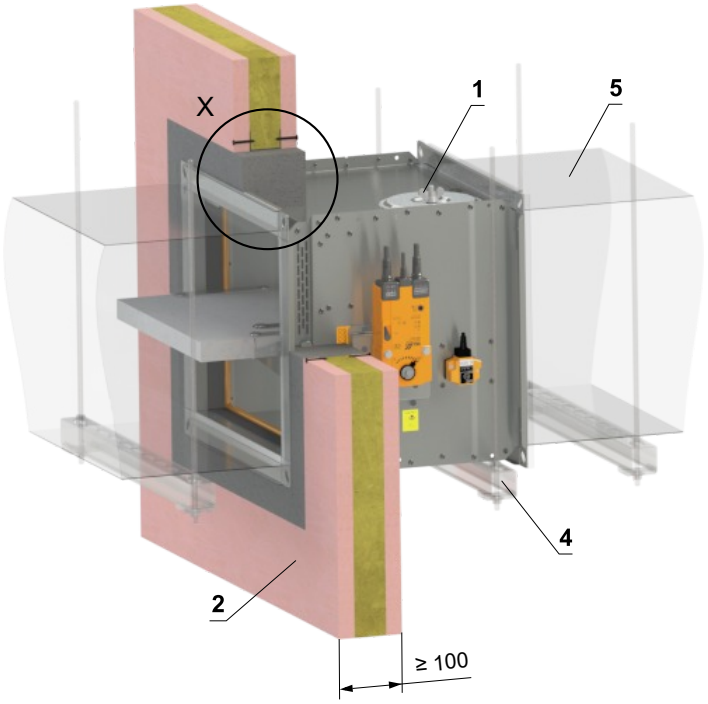

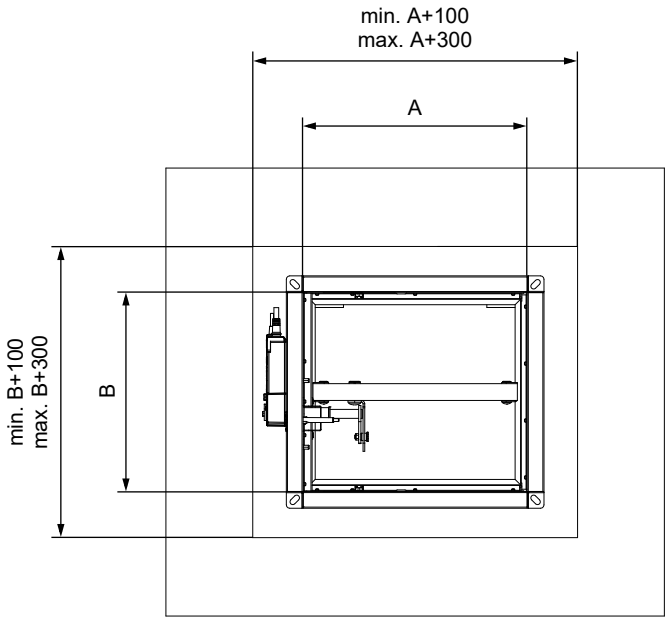

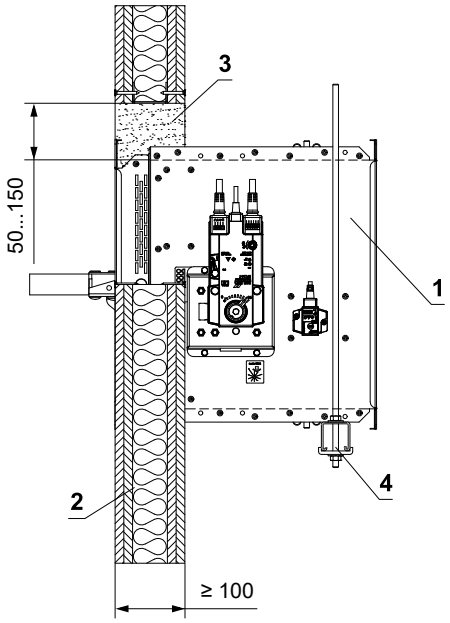

1 FDMB
2 Gypsum wall construction
3 British gypsum thistle bond 60 (or equivalent can be used) minimum density 670 kg/m³
4 Fixing profile with threaded rod → see pages 44 to 45
5 Duct

In gypsum wall construction min. EI 90 - Ablative Coated Batt 100mm

EI 90 (v_e) S [V/H]

- Standard flexible wall construction min. EI 90 according to EN 1363-1.
- For connection following duct → see page 46
- The installation opening is lined with a UW/CW profile.

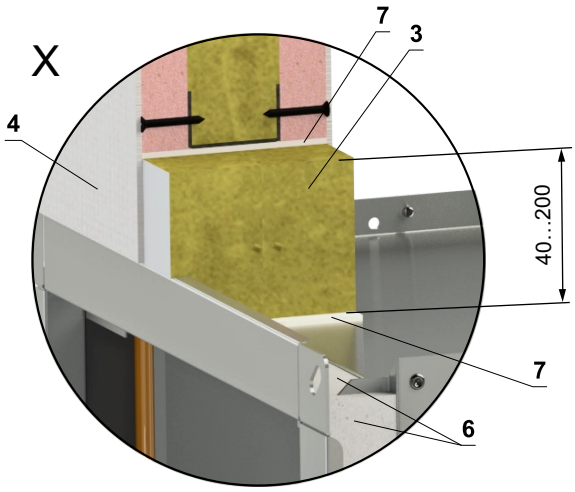

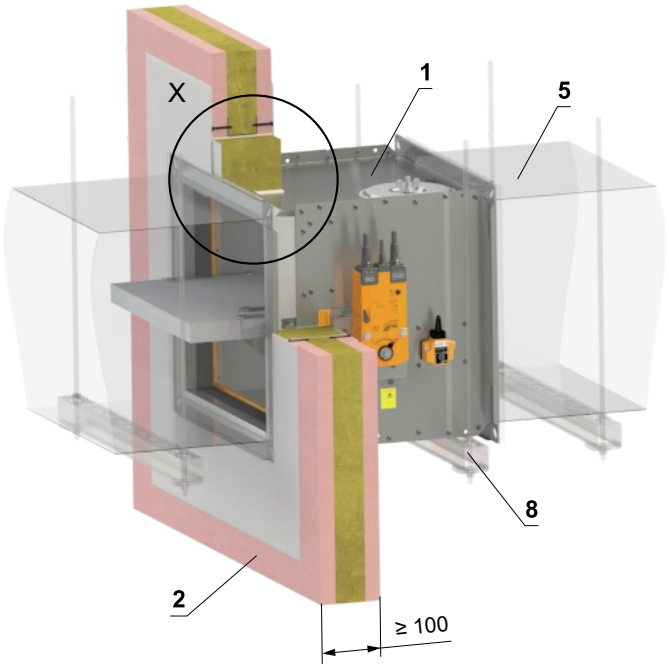

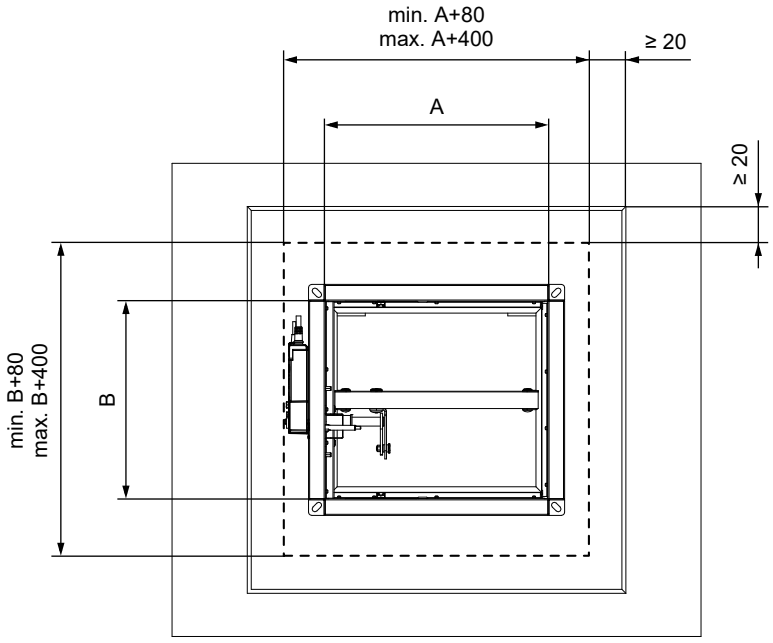

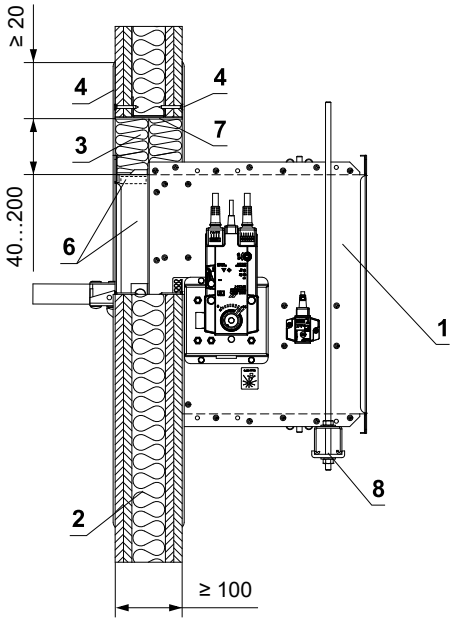

1 FDMB
2 Gypsum wall construction
3 Ablative Coated Batt (e.g. Firestop Board HILTI CFS-CT B 1S 140/50 - min. density 140 kg/m³ + Firestop acrylic sealant HILTI CFS-S ACR or equivalent)
4 Fire stop coating thickness 1 mm (e.g. HILTI CFS-CT, PROMASTOP-CC or equivalent)
5 Duct
6 Protective cladding boards - (not part of the damper) but must be used as part of the penetration filling → see page 55
7 Fire resistant mastic - fill the gap on both sides of the fire separation construction and around the perimeter of penetration and damper body. (e.g. HILTI CFS-S ACR)
8 Fixing profile with threaded rod → see pages 44 to 45

In gypsum wall construction - flexible ceiling - installation frame E5

Installation directly on the ceiling

EI 90 (v_e) S [V/H]

- Detailed instructions for installation E5 frame → see manual
- For connection of following duct → see page 46
- Installation frame can be installed on the damper or delivered separately
- Gypsum construction must be made in accordance with the specifications of the wall system manufacturer

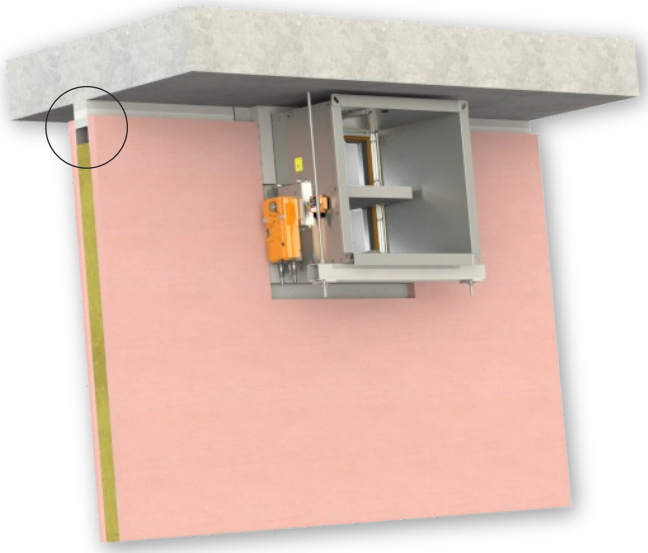

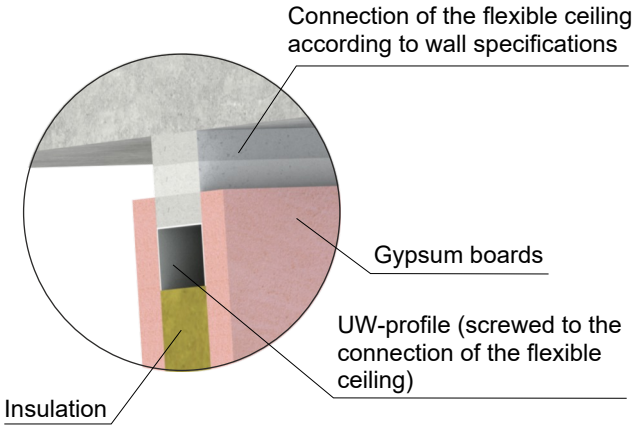

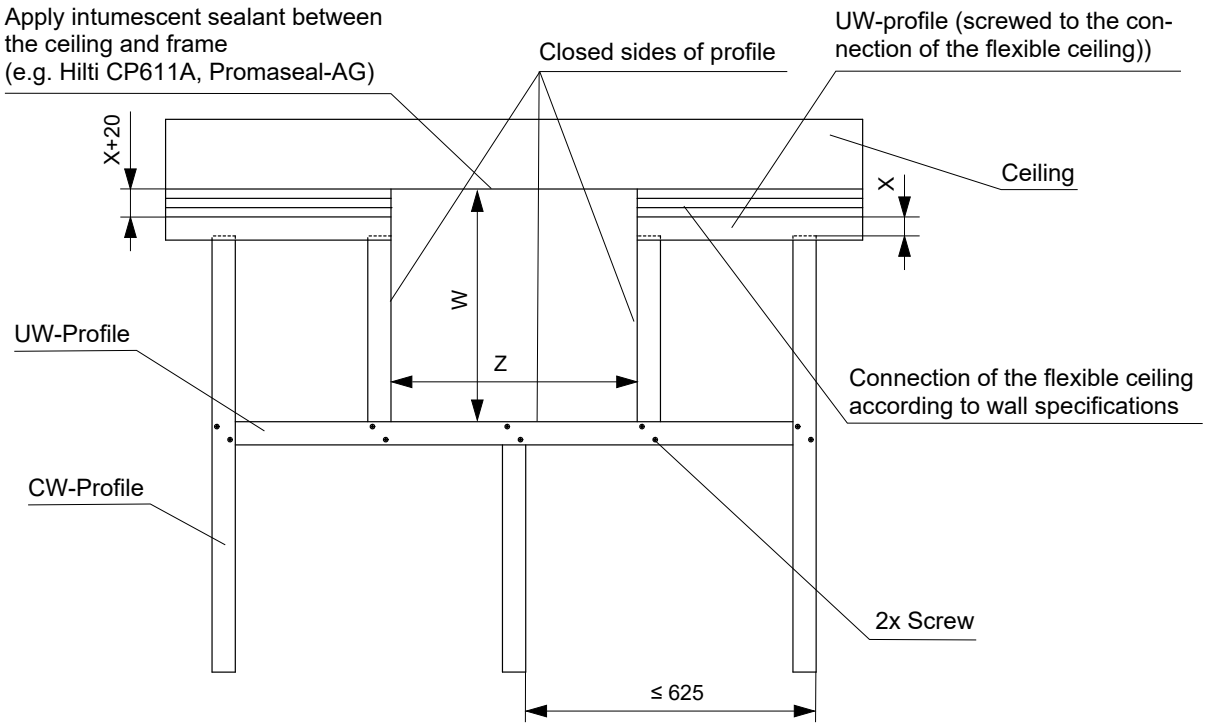

Installation frame	W [mm]	Z [mm]
E5	B + 190 + X	A + 189 + (2 x F)

- X = ceiling movement ≤ 40 mm
- F = gap between frame (promaseal) and profile = 2 to 5 mm

Installation at a maximum distance of 80 mm from the ceiling

EI 90 (v_e) S [V/H]

- Detailed instructions for installation E5 frame → see manual
- For connection of following duct → see page 46
- Installation frame can be installed on the damper or delivered separately
- Gypsum construction must be made in accordance with the specifications of the wall system manufacturer

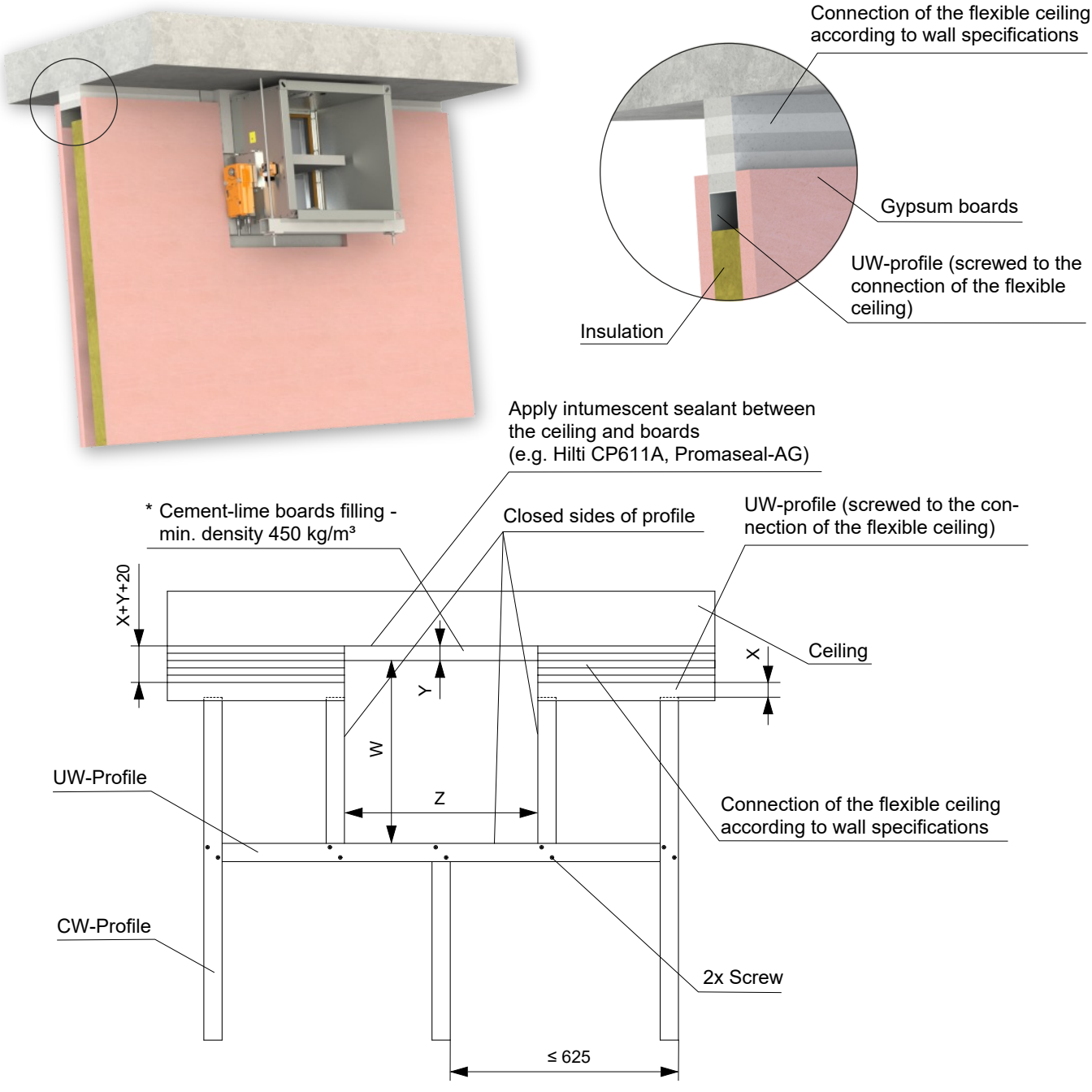

Installation frame	W [mm]	Z [mm]
E5	B + 190 + X + Y	A + 189 + (2 x F)

* Width of the boards for frame E5 = 100 mm

- X = ceiling movement ≤ 40 mm
- Y = distance of frame from ceiling max. 80 mm
- F = gap between frame (promaseal) and profile = 2 to 5 mm

In gypsum wall construction min. EI 60 - mortar or gypsum

EI 60 (v_e) S [V/H]

- Standard flexible wall construction min. EI 60 according to EN 1363-1.
- For connection following duct → see page 46
- This installation was tested without supports. Supports are optional, if are used, follow the manufacturer's instructions and national standards.
- The installation opening is lined with a UW/CW profile.

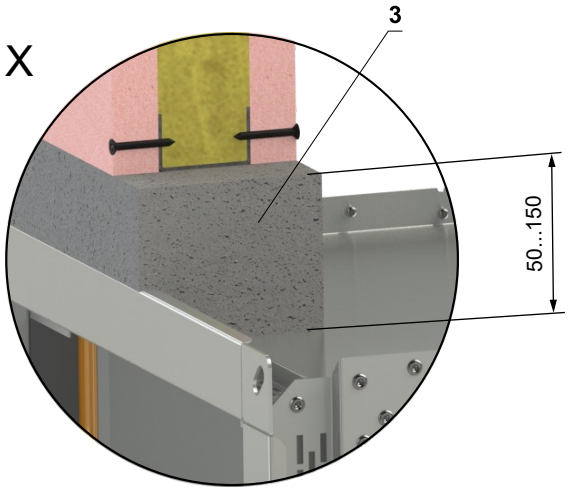

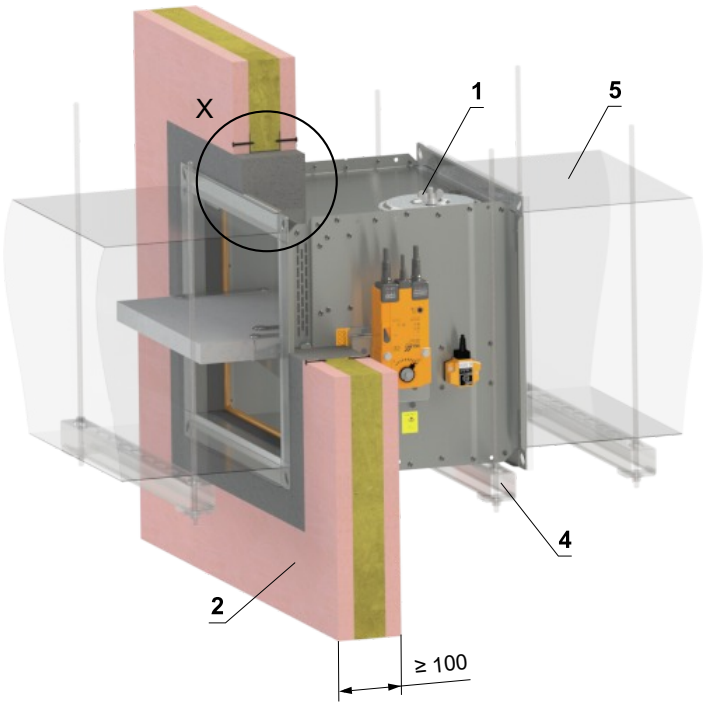

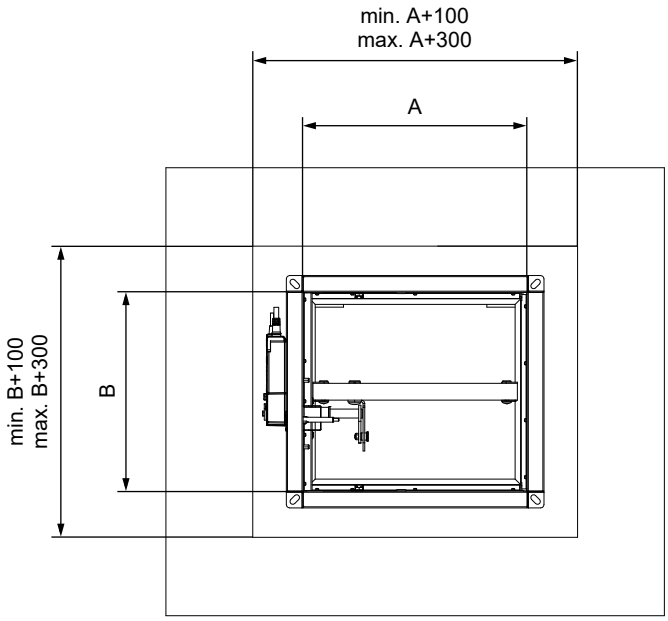

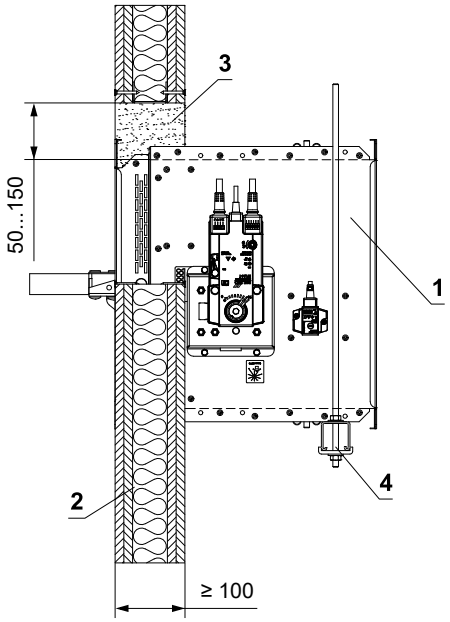

1 FDMB
2 Gypsum wall construction
3 British gypsum thistle bond 60 (or equivalent can be used) minimum density 670 kg/m³
4 Fixing profile with threaded rod → see pages 44 to 45
5 Duct

In gypsum wall construction min. EI 60 - Ablative Coated Batt 100mm

EI 60 (v_e) S [V/H]

- Standard flexible wall construction min. EI 60 according to EN 1363-1.
- For connection following duct → see page 46
- The installation opening is lined with a UW/CW profile.

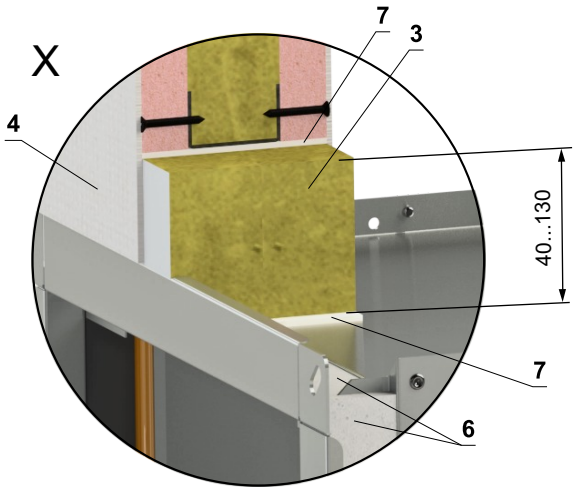

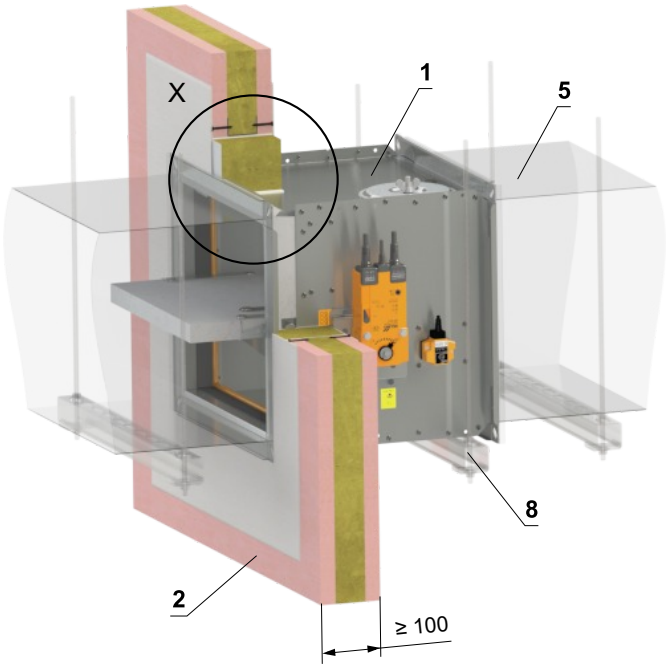

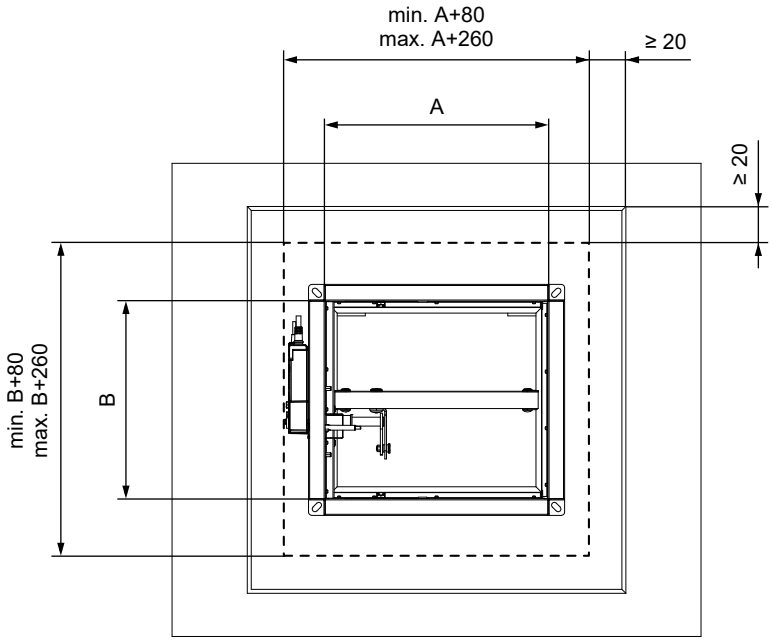

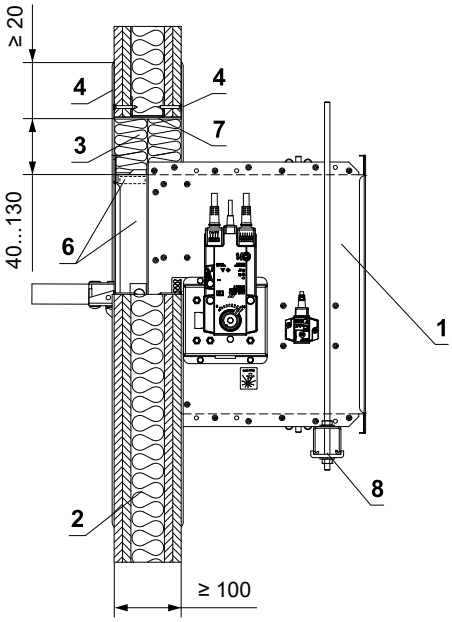

1 FDMB
2 Gypsum wall construction
3 Ablative Coated Batt (e.g. Firestop Board HILTI CFS-CT B 1S 140/50 - min. density 140 kg/m³ + Firestop acrylic sealant HILTI CFS-S ACR or equivalent)
4 Fire stop coating thickness 1 mm (e.g. HILTI CFS-CT, PROMASTOP-CC or equivalent)
5 Duct
6 Protective cladding boards - (not part of the damper) but must be used as part of the penetration filling → see page 55
7 Fire resistant mastic - fill the gap on both sides of the fire separation construction and around the perimeter of penetration and damper body. (e.g. HILTI CFS-S ACR)
8 Fixing profile with threaded rod → see pages 44 to 45

In gypsum wall construction min. EI 30 - mortar or gypsum

EI 30 (v_e) S [V/H]
EI 45 (v_e) S [V/H]

- Standard flexible wall construction min. EI 30 according to EN 1363-1.
- For connection following duct → see page 46
- This installation was tested without supports. Supports are optional, if are used, follow the manufacturer's instructions and national standards.
- In this installation below do not use BUILT IN EDGE sticker. The Damper blade must be installed in the center line of the wall construction.
- The installation opening is lined with a UW/CW profile.

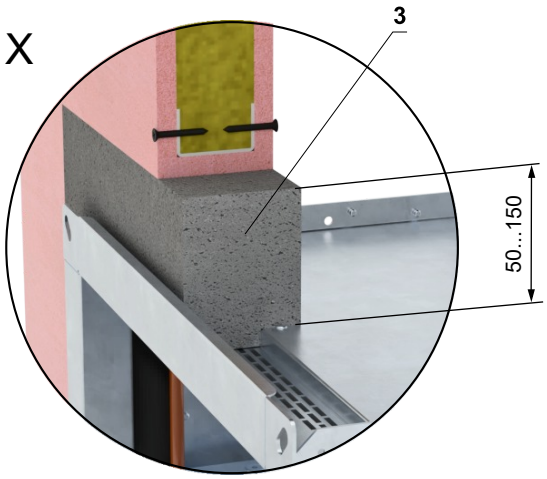

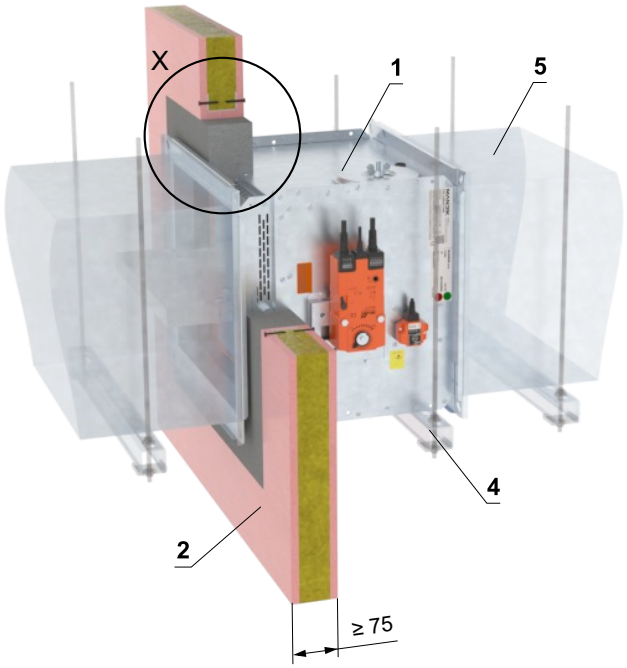

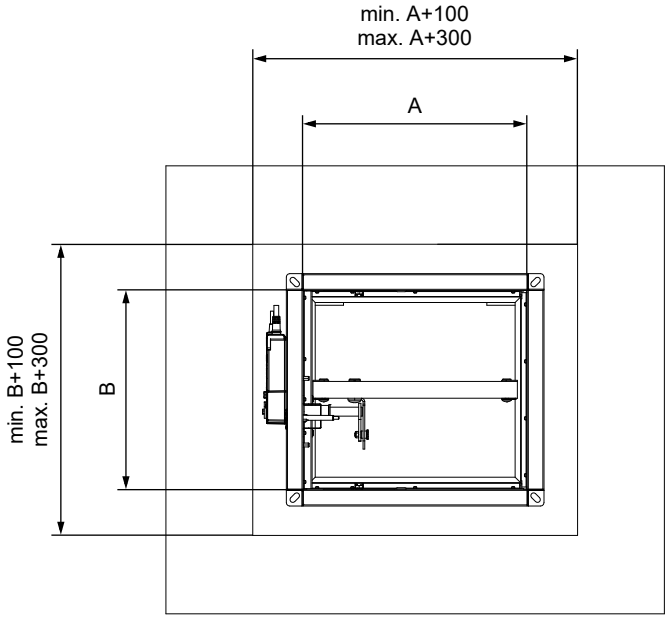

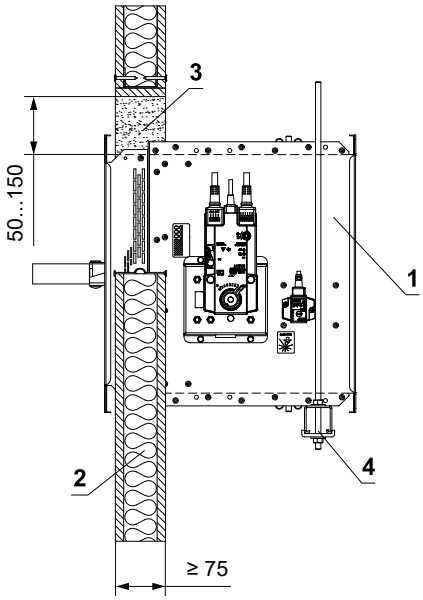

1 FDMB
2 Gypsum wall construction
3 British gypsum thistle bond 60 (or equivalent can be used) minimum density 670 kg/m³
4 Fixing profile with threaded rod → see pages 44 to 45
5 Duct

In gypsum wall construction min. EI 30 - Ablative Coated Batt 50mm

EI 30 (v_e) S [V/H]
EI 45 (v_e) S [V/H]

- Standard flexible wall construction min. EI 30 according to EN 1363-1.
- For connection following duct → see page 46
- In this installation below do not use BUILT IN EDGE sticker. The Damper blade must be installed in the centre line of the wall construction.
- The installation opening is lined with a UW/CW profile.

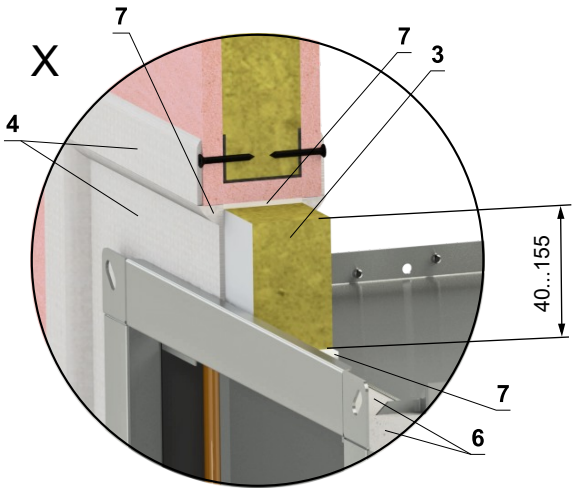

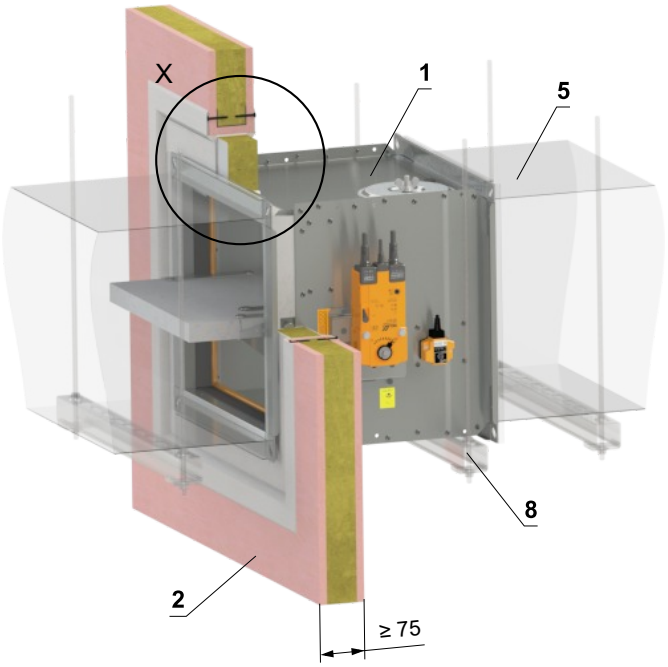

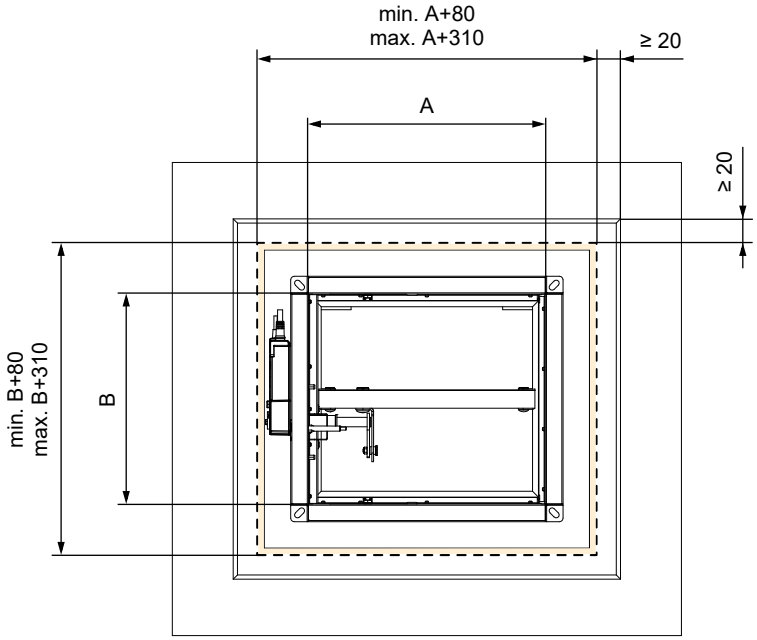

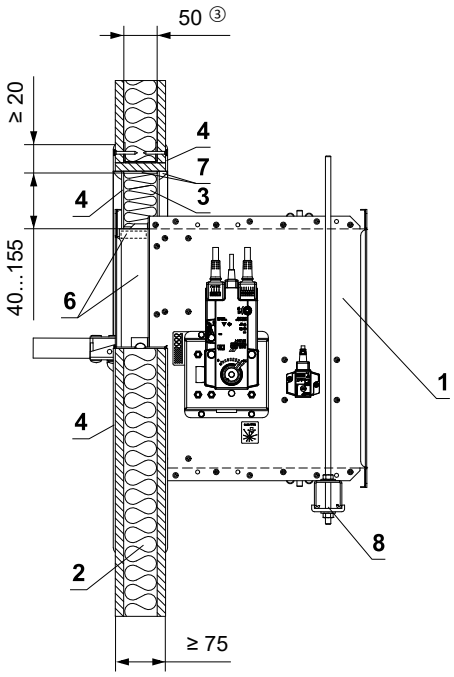

1 FDMB
2 Gypsum wall construction
3 Ablative Coated Batt (e.g. Firestop Board HILTI CFS-CT B 1S 140/50 - min. density 140 kg/m³ + Firestop acrylic sealant HILTI CFS-S ACR or equivalent)
4 Fire stop coating thickness 1 mm (e.g. HILTI CFS-CT, PROMASTOP-CC or equivalent)
5 Duct
6 Protective cladding boards - (not part of the damper) but must be used as part of the penetration filling → see page 55
7 Fire resistant mastic - fill the gap on both sides of the fire separation construction and around the perimeter of penetration and damper body. (e.g. HILTI CFS-S ACR)
8 Fixing profile with threaded rod → see pages 44 to 45

Installation outside gypsum wall construction

Outside gypsum wall construction min. EI 90 - ISOVER Ultimate Protect - Ablative Coated Batt

EI 90 (v_e) S [V/H]

- Standard flexible wall construction min. EI 90 according to EN 1363-1.
- For connection of following duct → see page 46
- Minimum and maximum distance between the wall and fire damper is unlimited
- When installing the insulation, follow the ISOVER manufacturer's instructions
- The damper and the duct must be suspended separately
- The duct must be suspended on both sides of damper acc. to national rules
- Duct between fire damper and fire separating construction must be suspended by using threaded rods and mounting profiles, or another mounting system acc. to national standards
- Load of the suspension system depends on weight of the fire damper and duct system → see page 44
- Max. distance between two suspension systems is 1500 mm
- Duct at the point of penetration must be fixed to the fire separation structure
- Following air-conditioning duct must be suspended or supported so that all load transfer from the following duct to the fire damper is absolutely excluded. Adjacent duct must be suspended or supported, as required by the duct suppliers
- Damper inspection holes are covered with insulation, therefore it's necessary to make an inspection hole on the connecting duct
- If the threaded rod is located inside the duct insulation, distance between threaded rod and duct is max 30 mm
- If the threaded rod is located outside the duct isolation, distance between threaded rod and isolation is max. 40 mm
- For this installation VRM2-B reinforcement frame must be used → see page 54
- The installation opening is lined with a UW/CW profile.

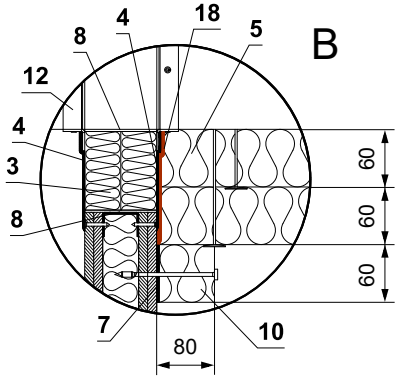

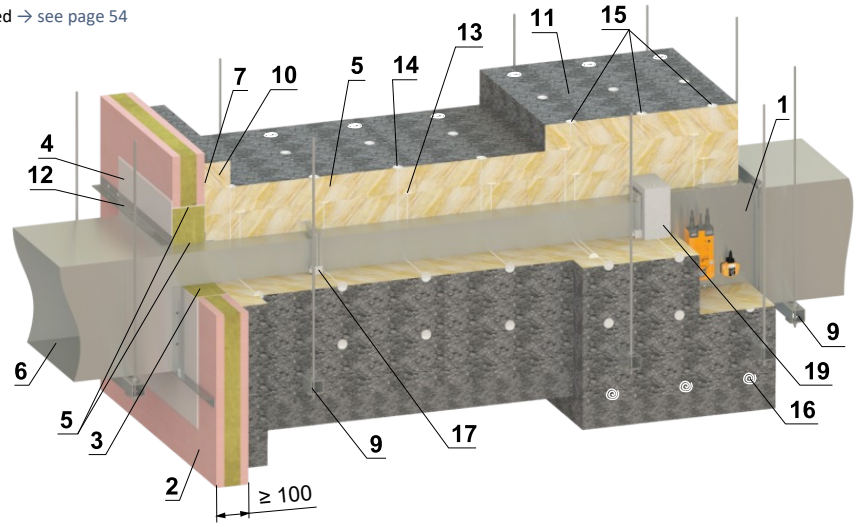

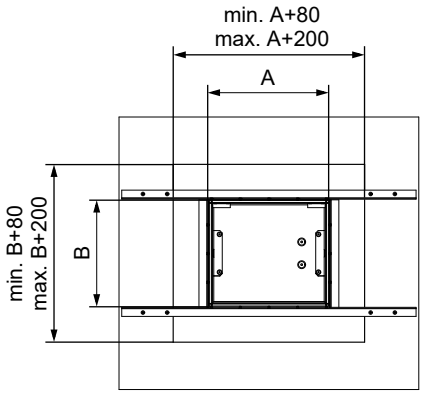

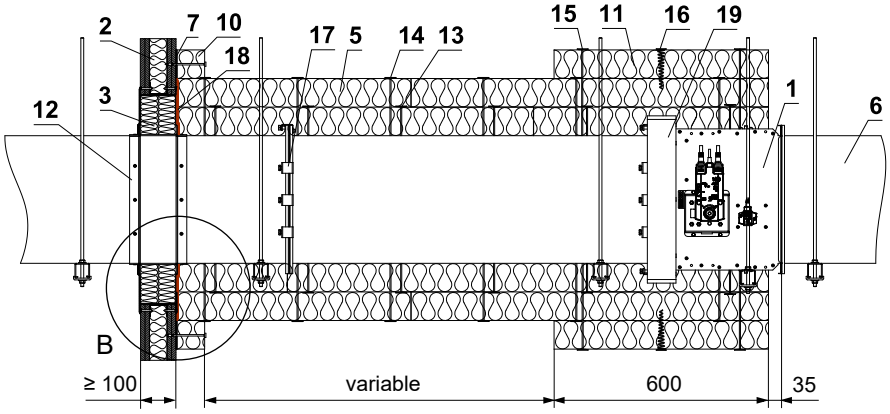

1 FDMB
2 Gypsum wall construction
3 Ablative Coated Batt (e.g. Firestop Board HILTI CFS-CT B 1S 140/50 - min. density 140 kg/m³ + Firestop acrylic sealant HILTI CFS-S ACR or equivalent)
4 Fire stop coating thickness 1 mm (e.g. HILTI CFS-CT, PROMASTOP-CC or equivalent)
5 Insulation board made of stone wool, with a surface treatment of aluminum foil, min. density 66 kg/m³ (ISOVER Ultimate Protect SLAB 4.0 Alu1, th. 60 mm)
6 Standard air ducts, made of galvanized sheet thickness 0,8 mm, flanges 30 mm, acc. to BS EN 1507 and DIN 24190 – the duct must be anchored on both sides of the fire-separating structure, e.g. using L-profiles 30 × 30 × 3 mm – according to the ISOVER manufacturer's instructions
7 ISOVER Protect BSK glue - apply on the insulation and stick it to the fire separation construction
8 Fire resistant mastic - fill the gap on both sides of the fire separation construction and around the perimeter of penetration and damper body. (e.g. HILTI CFS-S ACR)
9 Fixing profile with threaded rod → see pages 44 to 45
10 Duct penetration insulation collar - ISOVER Ultimate Protect SLAB 4.0 Alu1, th. 60 mm - glued (pos. 7) and fixed with screws to the wall construction
11 Insulating collar of the damper and duct connection - ISOVER Ultimate Protect SLAB 4.0 Alu1, th. 60 mm
13 Stud-welded pins 60 mm - quantity and placing acc. to ISOVER manufa.
14 Stud-welded pins 120 mm - quantity and placing acc. to ISOVER manufa.
15 Stud-welded pins 180 mm - quantity and placing acc. to ISOVER manufa.
16 Fire spiral shaped screws - quantity and placing acc. to ISOVER manufa.
17 Steel clamp min. M8 bolts
18 ISOVER Protect BSF
19 VRM2-B → see page 54

In CLT wall construction

In CLT wall construction min. REI 60 - mortar or gypsum

EI 90 (v_e) S [V/H]

- Non-standard CLT wooden wall construction min. REI 60
- Cross laminated timber wall: min. thickness 100 mm, type of wood: European spruce, min. strength class C24, min. fire resistance REI 60, min. reaction to fire D-S2, d0, min. density 380 kg/m³. (e.g. Storaenso SYLVA CLT 100 C3s)
- For connection of following duct → see page 46

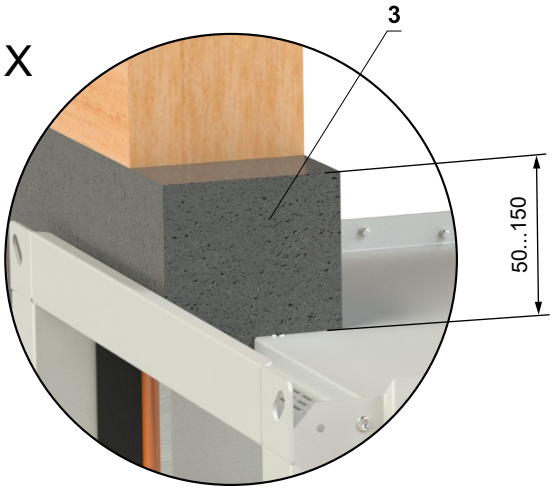

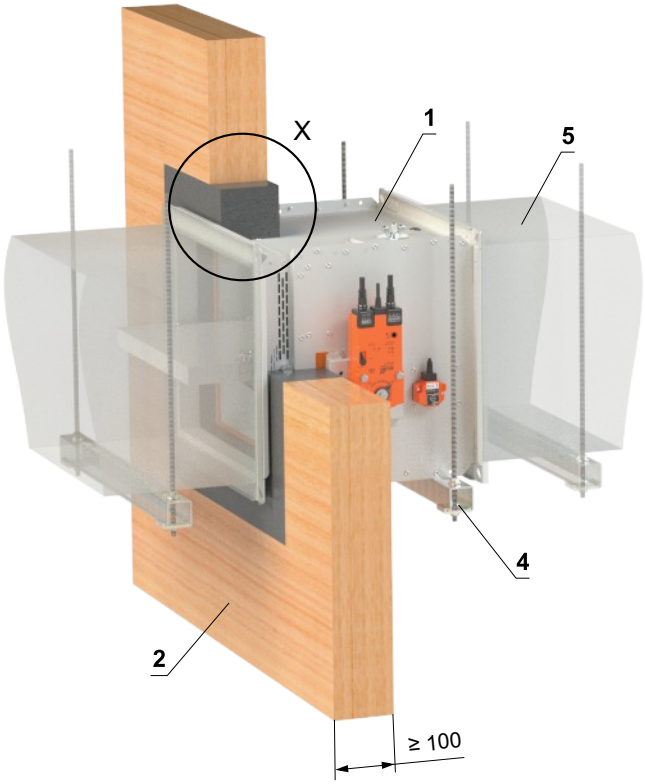

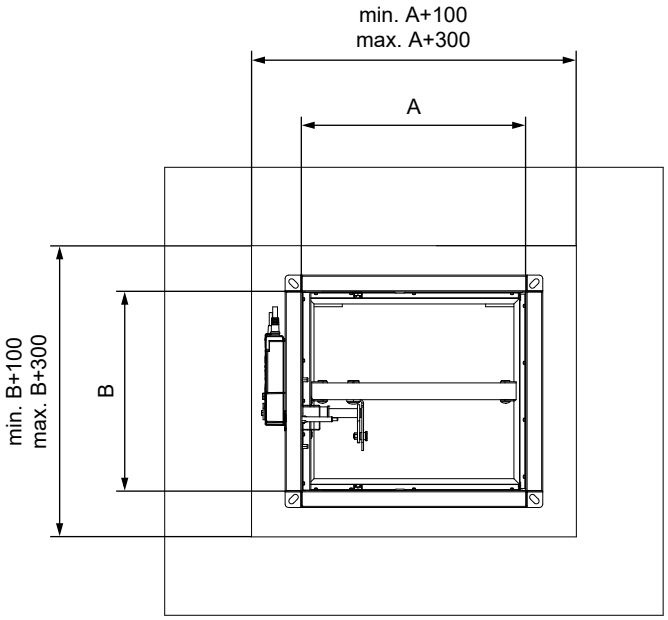

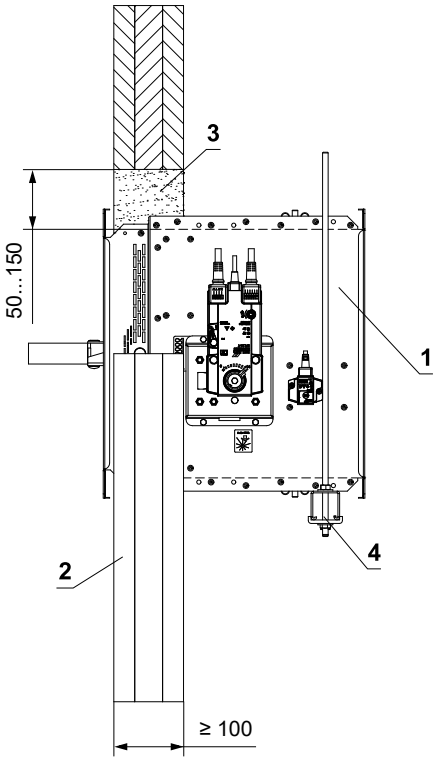

1 FDMB
2 CLT wall construction
3 British gypsum thistle bond 60 (or equivalent can be used) minimum density 670 kg/m³
4 Fixing profile with threaded rod → see pages 44 to 45
5 Duct

In CLT wall construction min. REI 60 - Ablative Coated Batt

EI 90 (v_e) S [V/H]

- Non-standard CLT wooden wall construction min. REI 60
- Cross laminated timber wall: min. thickness 100 mm, type of wood: European spruce, min. strength class C24, min. fire resistance REI 60, min. reaction to fire D-S2, d0, min. density 380 kg/m³. (e.g. Storaenso SYLVA CLT 100 C3s)
- For connection following duct → see page 46

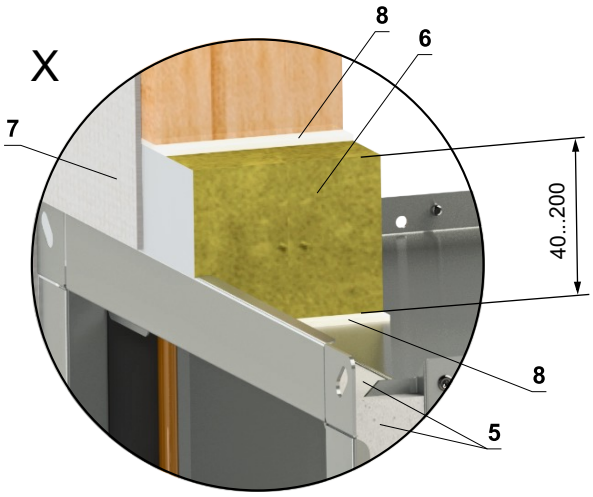

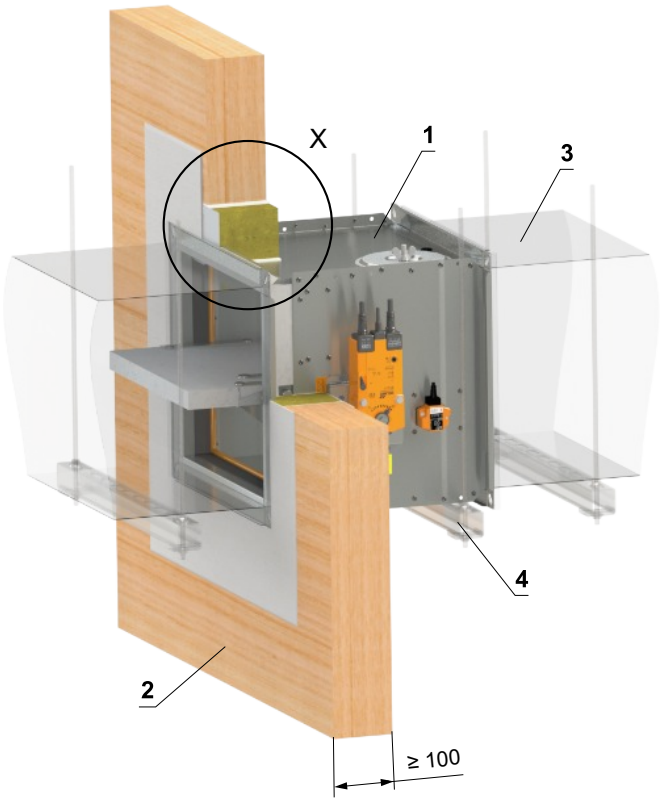

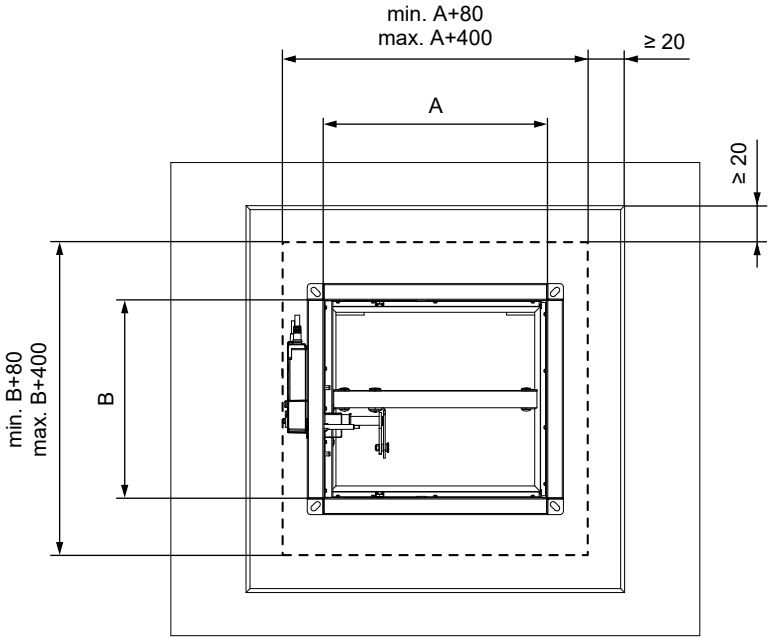

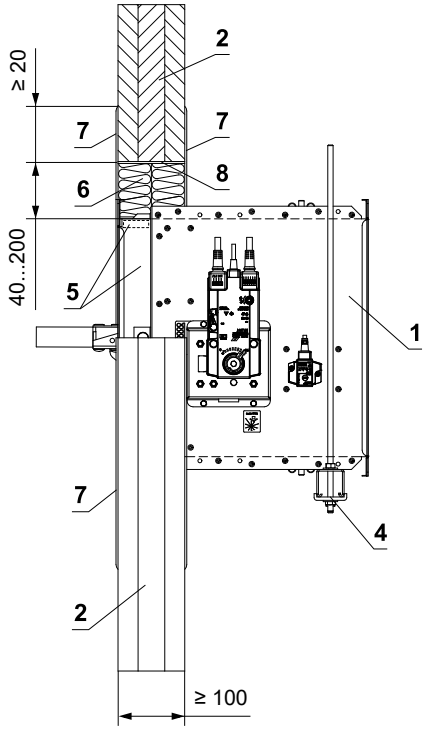

1 FDMB
2 CLT wall construction
3 Duct
4 Fixing profile with threaded rod → see pages 44 to 45
5 Protective cladding boards - (not part of the damper) but must be used as part of the penetration filling → see page 55
6 Ablative Coated Batt (e.g. Firestop Board HILTI CFS-CT B 1S 140/50 - min. density 140 kg/m³ + Firestop acrylic sealant HILTI CFS-S ACR or equivalent)
7 Fire stop coating thickness 1 mm (e.g. HILTI CFS-CT, PROMASTOP-CC or equivalent)
8 Fire resistant mastic - fill the gap on both sides of the fire separation construction and around the perimeter of penetration and damper body. (e.g. HILTI CFS-S ACR)

In the fire barrier ROCKWOOL Fire Cavity Barrier EN

EI 60 (v_e) S [V/H]

- Non-standard lightweight wall construction ROCKWOLL Cavity Barrier EN
- Follow the instructions of ROCKWOOL manufacturer.

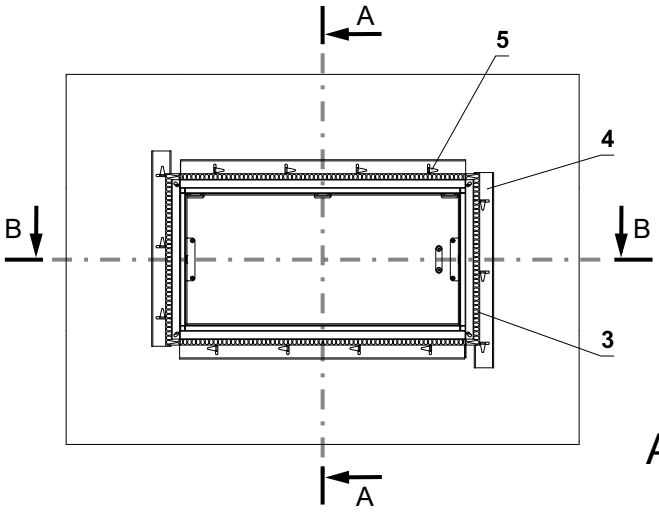

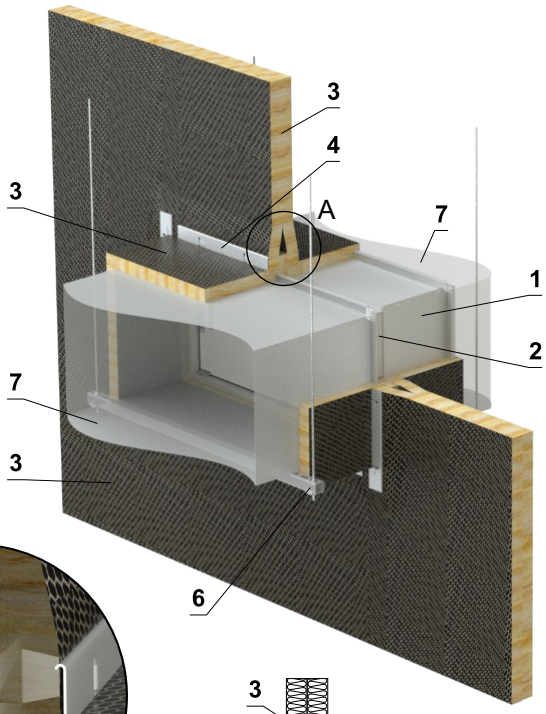

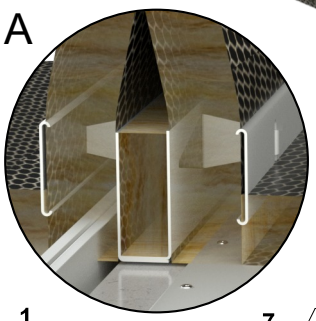

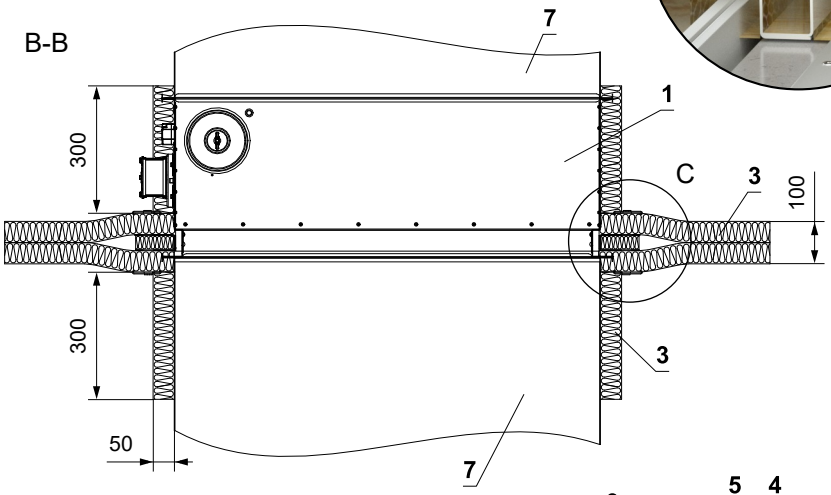

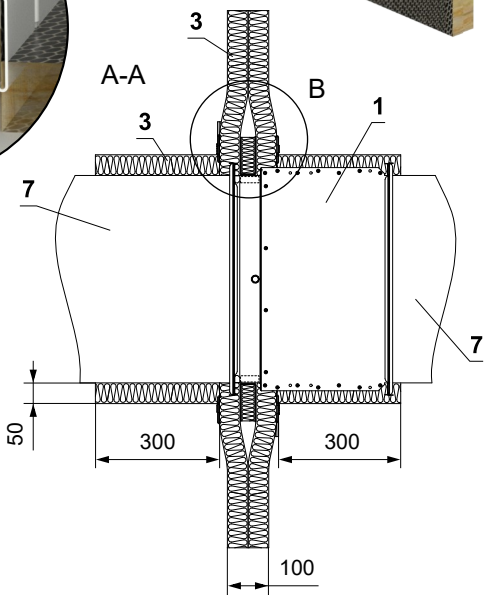

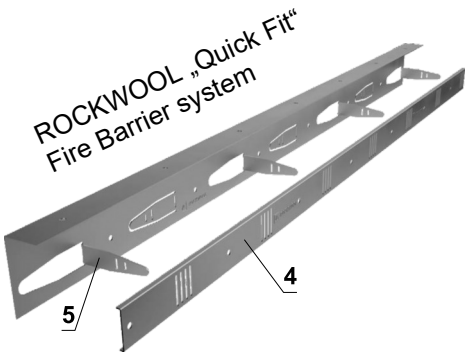

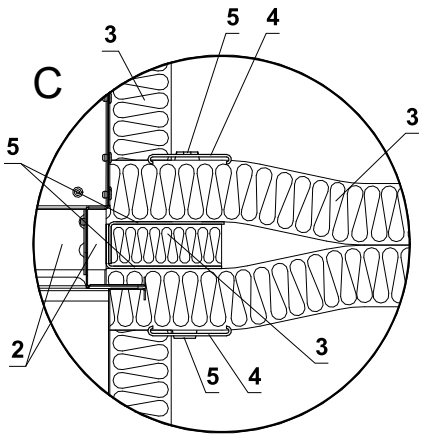

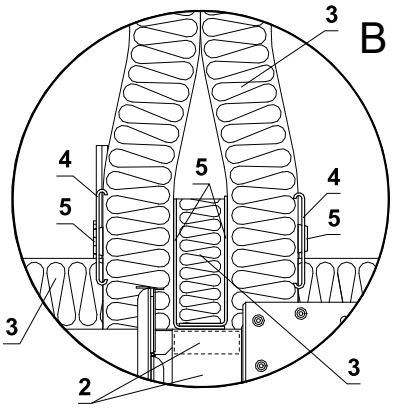

1 FDMB
2 Protective cladding boards - (not part of the damper) but must be used as part of the penetration filling → see page 55
3 ROCKWOOL Fire Barrier EN - Stitch all joints of „Fire Barrier EN“ together using steel wire
4 Fire Barrier EN Clamping Plate - secure the Fire Barrier insulation with anchor of Angle Support, passing through the insulation - by inserting to hole of Clamping Plate and securing by bending of anchor (sheet metal)
5 Fire Barrier EN Angle Support - using 2 pcs of Angle Support make the „U“ channel which secured with screws TEX 4.2x13 mm („U“ channel install around perimeter of damper)
6 Fixing profile with threaded rod → see pages 44 to 45
7 Duct

In shaft wall construction

EI 60 (v_e) S [V/H]
***EI 90 (v_e) S [V/H]**

In shaft wall construction min. EI 60 - mortar or gypsum

- Non-standard asymm. shaft wall construction, min. EI 60
- For connection of following duct → see page 46
- Damper can be installed on either side of the wall
- It is possible to use e.g. wall type A306002 (EIS 60), A306003 (EIS 90)… from www.british-gypsum.com
- It is possible to use walls that have the same or greater thickness and density of boards than the walls listed below (more layers of boards can also be used)
- Follow the instructions of the shaft wall manufacturer.

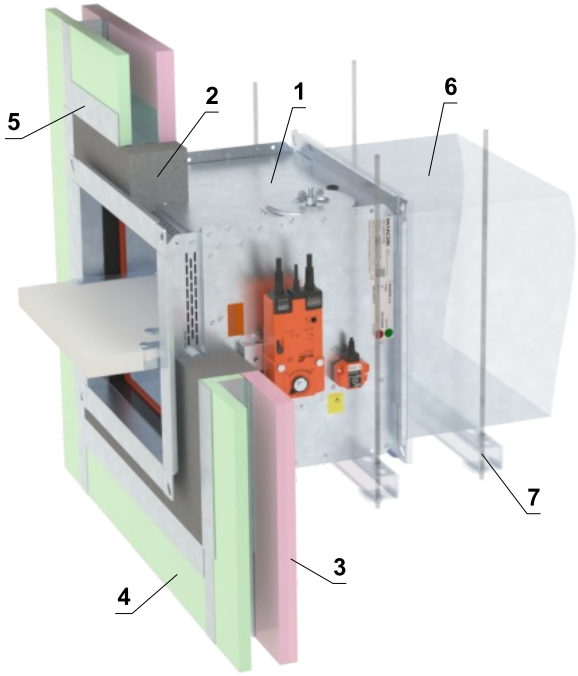

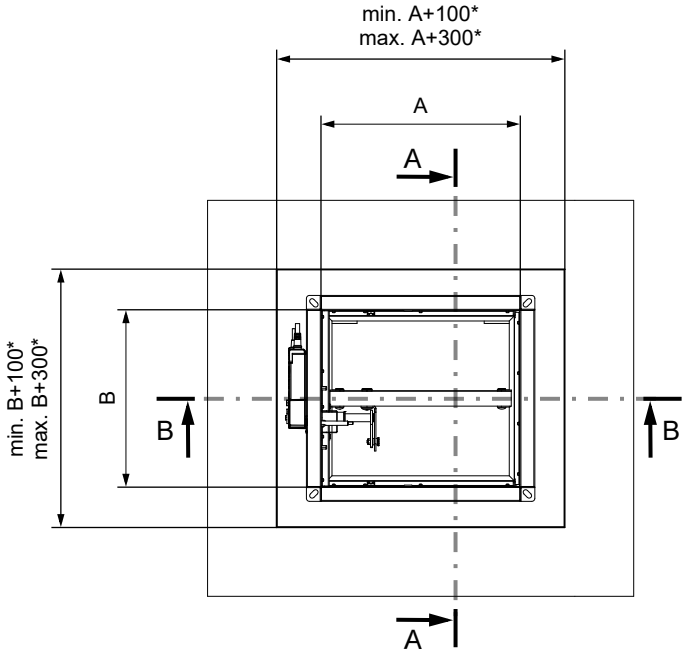

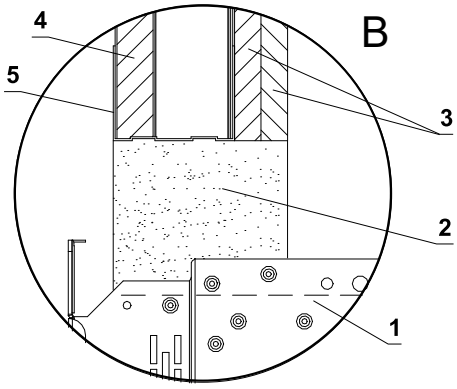

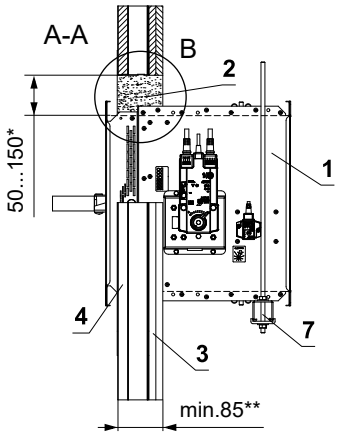

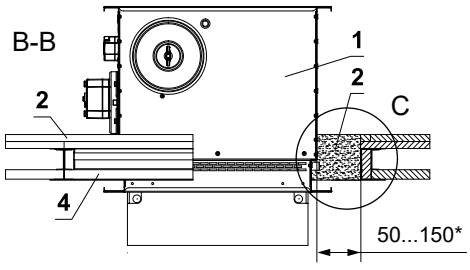

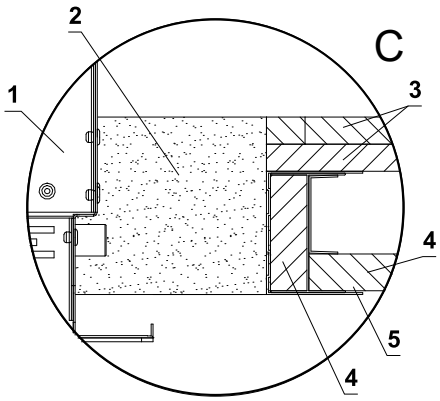

1 FDMB
2 British gypsum thistle bond 60 (or equivalent can be used) minimum density 670 kg/m³
3 Plasterboard EN 520 - Type F min. 2x12,5 mm**
4 Plasterboard EN 520 - Type F min. 1x19 mm**
5 Plasterboard profile
6 Duct
7 Fixing profile with threaded rod → see pages 44 to 45

* In the case of fire resistance EI 90, the installation gap is limited to 50 mm $^{+0/-10}$.
For fire resistance EI 60 or lower, an installation gap range of 50–150 mm is permitted.

** For fire resistance of the shaftwall EI 60 S

In shaft wall construction min. EI 60 - Ablative Coated Batt

EI 60 (v_e) S [V/H]
***EI 90 (v_e) S [V/H]**

- Non-standard asymm. shaft wall construction, min. EI 60
- For connection of following duct → see page 46
- Damper can be installed on either side of the wall
- It is possible to use e.g. wall type A306002 (EIS 60), A306003 (EIS 90)… from www.british-gypsum.com
- It is possible to use walls that have the same or greater thickness and density of boards than the walls listed below (more layers of boards can also be used)
- Follow the instructions of the shaft wall manufacturer.

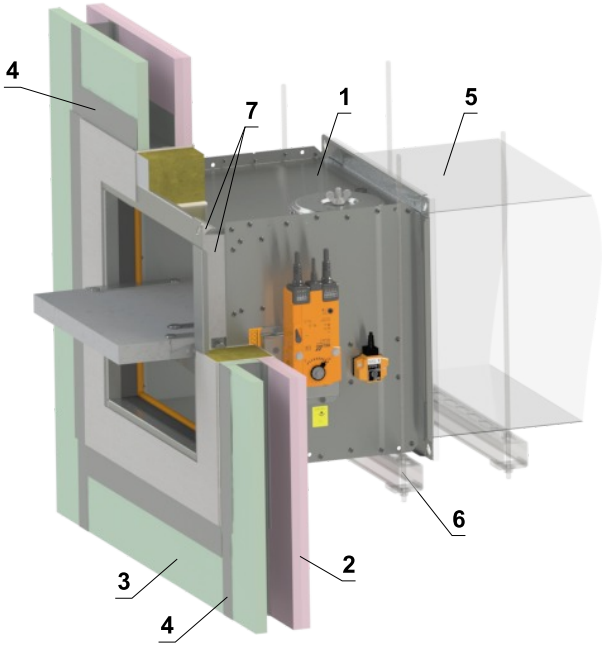

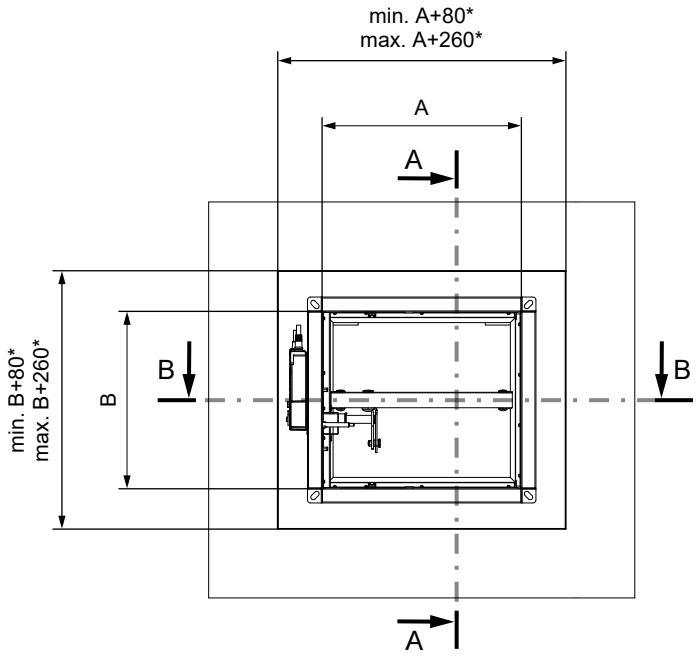

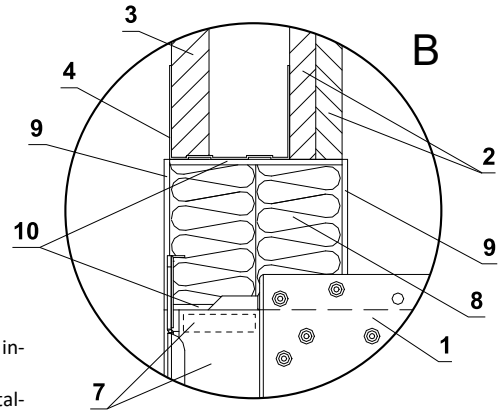

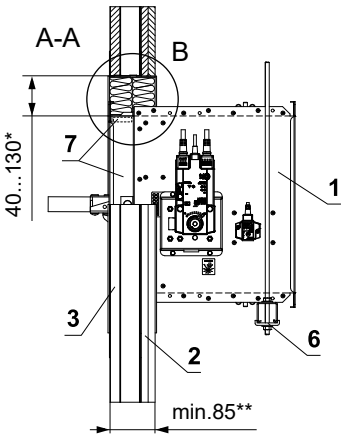

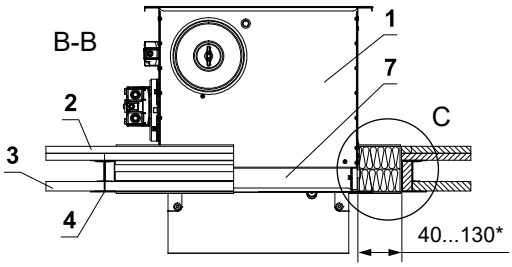

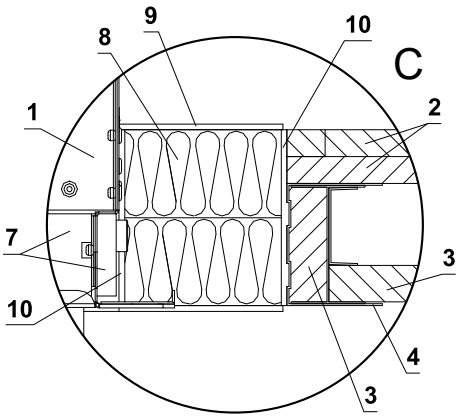

* In the case of fire resistance EI 90, the installation gap is limited to 100 mm $^{+0/-10}$. For fire resistance EI 60 or lower, an installation gap range of 40–130 mm is permitted.

1 FDMB
2 Plasterboard BS EN 520 - Type F min. 2x12,5 mm**
3 Plasterboard BS EN 520 - Type F min. 1x19 mm**
4 Plasterboard profile
5 Duct
6 Fixing profile with threaded rod → see pages 44 to 45
7 Protective cladding boards - (not part of the damper) but must be used as part of the penetration filling → see page 55 Ablative Coated Batt HILTI
8 Firestop Board - min. density 140 kg/m³ (HILTI CFS-CT B 1S 140/50...)
9 Fire stop coating thickness 1 mm (e.g. HILTI CFS-CT, PROMASTOP-CC or equivalent)
10 Firestop acrylic sealant - (HILTI CFS-S ACR...) fill the gap from both sides of the fire separation construction and around the perimeter of penetration and damper casing

** For fire resistance of the shaftwall EIS 60

In solid ceiling construction

In solid ceiling construction - mortar or gypsum

EI 90 (h_o) S [H]
***EI 120 (h_o) S [H]**
***EI 120 (h_o) S [H] - 500 Pa**

- Standard low- and high-density rigid floor construction according to EN 1366-2
- For connection following duct → see page 46
- This installation was tested without supports. Supports are optional, if are used, follow the manufacturer's instructions and national standards.
- The damper can be installed from both sides of the construction, i.e. From the top or the bottom side of the ceiling.

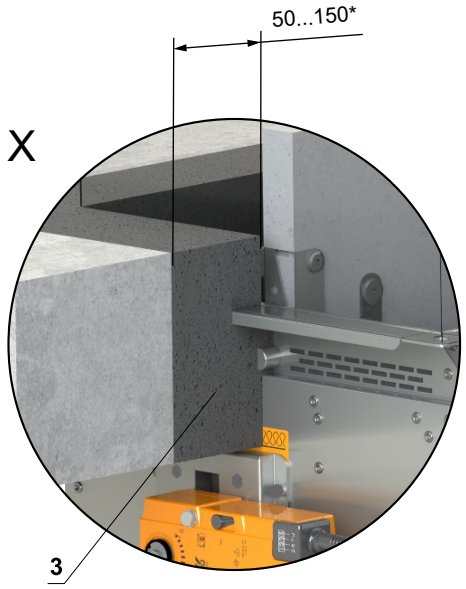

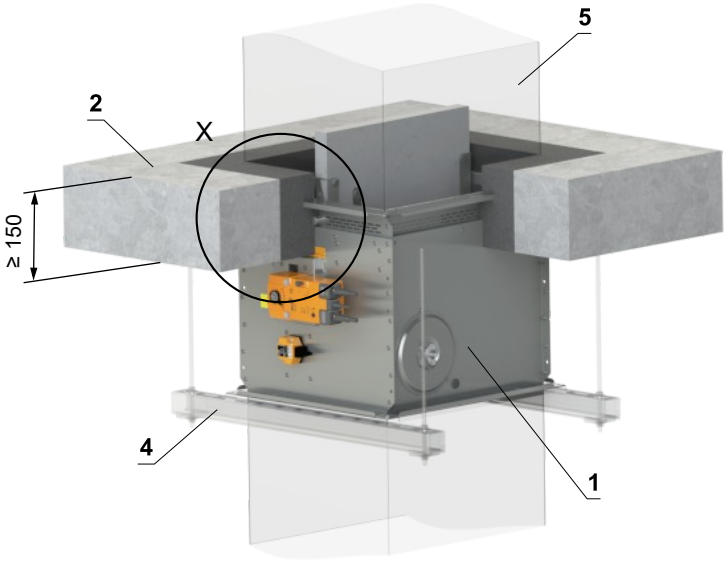

* In the case of fire resistance EI 120, the installation gap is limited to 50 mm $^{+10/-0}$.
For fire resistance EI 90 or lower, an installation gap range of 50–150 mm is permitted.

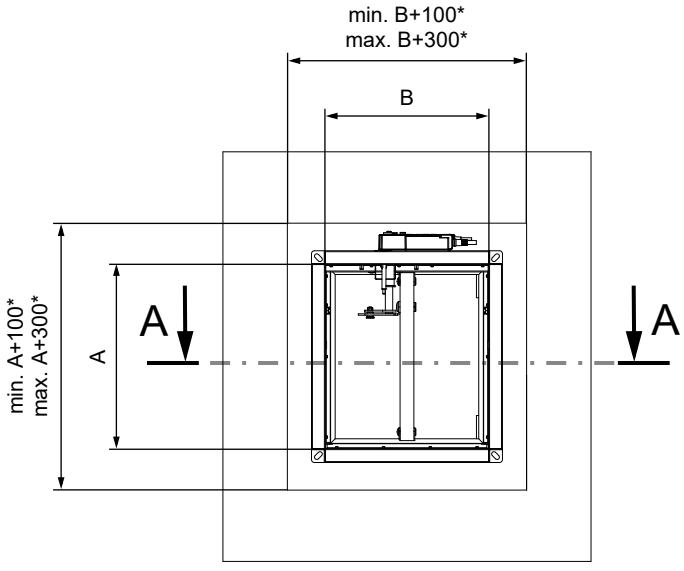

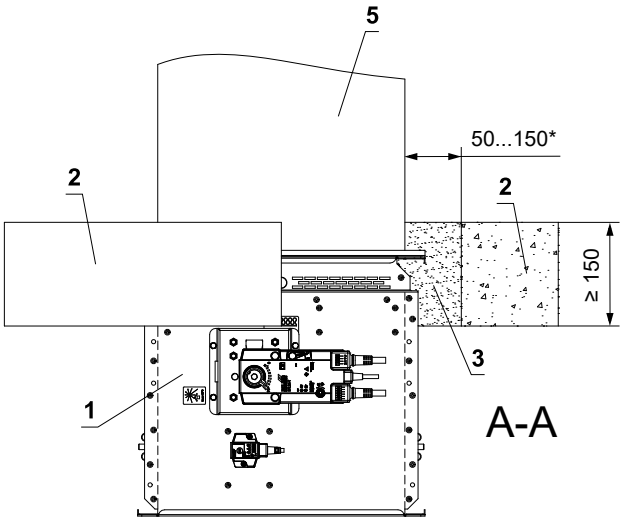

1 FDMB
2 Solid ceiling construction
3 British gypsum thistle bond 60 (or equivalent can be used) minimum density 670 kg/m³
4 Fixing profile with threaded rod → see pages 44 to 45
5 Duct

In solid ceiling construction - Ablative Coated Batt

EI 90 (h_o) S [H]

- Standard low- and high-density rigid floor construction according to EN 1366-2
- For connection following duct → see page 46
- The damper can be installed from both sides of the construction, i.e. From the top or the bottom side of the ceiling.

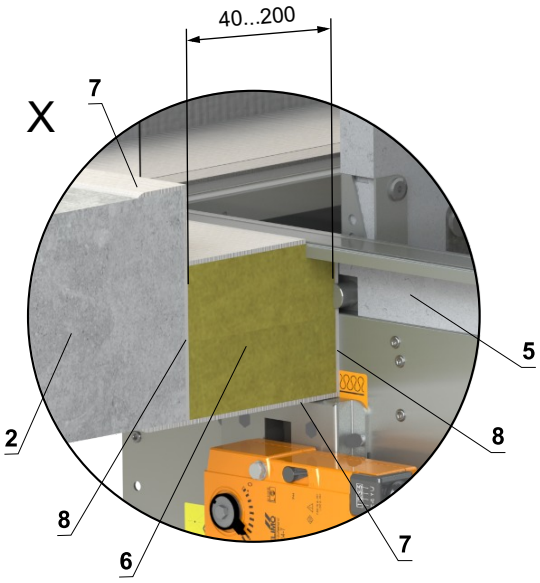

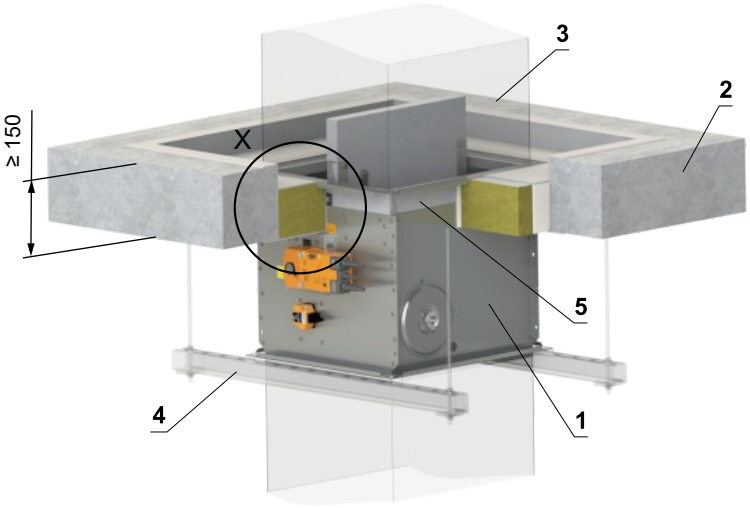

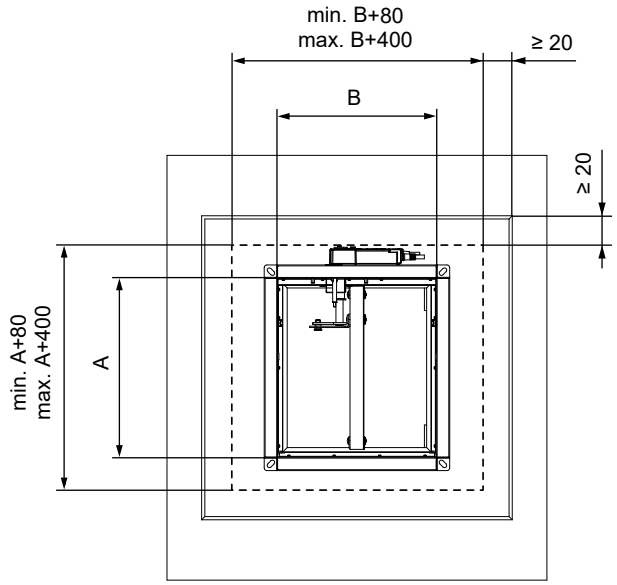

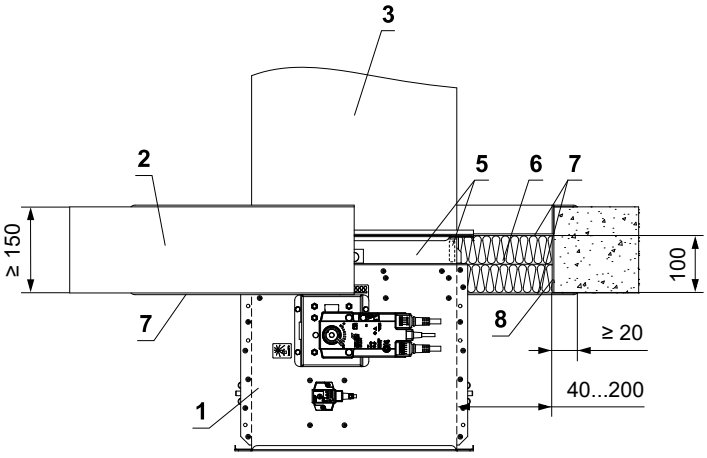

1 FDMB
2 Solid ceiling construction
3 Duct
4 Fixing profile with threaded rod → see pages 44 to 45
5 Protective cladding boards - (not part of the damper) but must be used as part of the penetration filling → see page 55
6 Ablative Coated Batt (e.g. Firestop Board HILTI CFS-CT B 1S 140/50 - min. density 140 kg/m³ + Firestop acrylic sealant HILTI CFS-S ACR or equivalent)
7 Fire stop coating thickness 1 mm (e.g. HILTI CFS-CT, PROMASTOP-CC or equivalent)
8 Fire resistant mastic - fill the gap on both sides of the fire separation construction and around the perimeter of penetration and damper body. (e.g. HILTI CFS-S ACR)

In CLT ceiling construction

In CLT ceiling construction min. REI 60 - mortar or gypsum

EI 90 (h_o) S [H]

- Non-standard CLT wooden ceiling construction min. REI 60
- Cross laminated timber floor: min. thickness 140 mm, type of wood: European spruce, min. strength class C24, min. fire resistance REI 60, min. reaction to fire D-S2, d0, min. density 380 kg/m³. (e.g. Storaenso SYLVA CLT 140 L5s)
- For connection following duct → see page 46
- The damper can be installed from both sides of the construction, i.e. From the top or the bottom side of the ceiling.

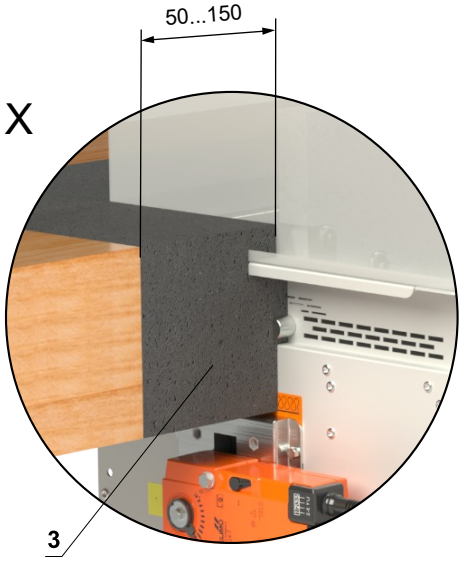

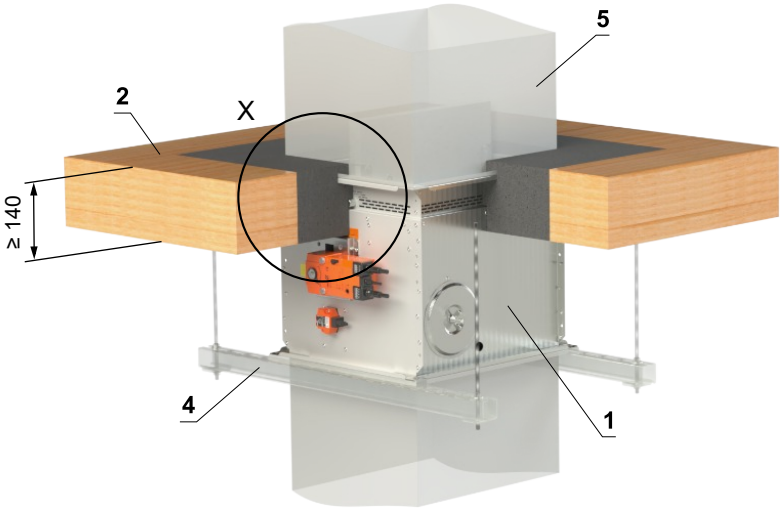

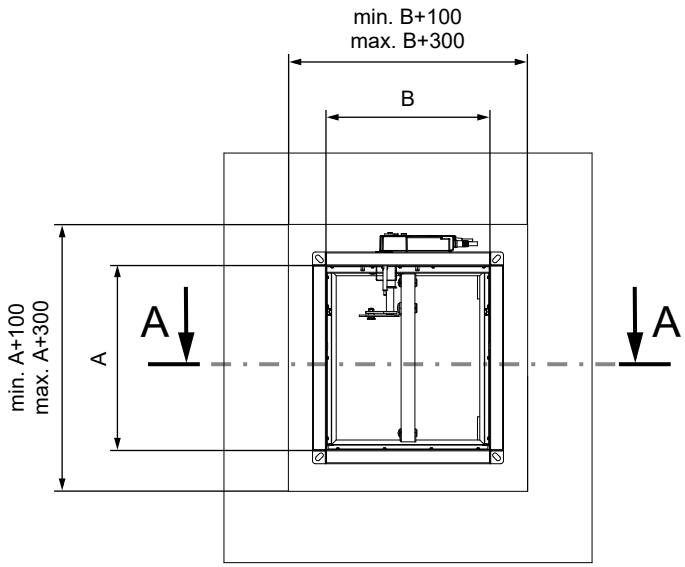

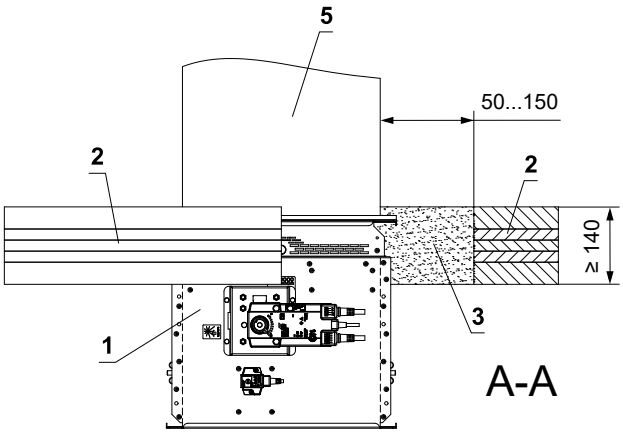

1 FDMB
2 CLT ceiling construction
3 British gypsum thistle bond 60 (or equivalent can be used) minimum density 670 kg/m³
4 Fixing profile with threaded rod → see pages 44 to 45
5 Duct

In CLT ceiling construction min. REI 60 - Ablative Coated Batt

EI 90 (h_o) S [H]

- Non-standard CLT wooden ceiling construction min. REI 60
- Cross laminated timber floor: min. thickness 140 mm, type of wood: European spruce, min. strength class C24, min. fire resistance REI 60, min. reaction to fire D-S2, d0, min. density 380 kg/m³. (e.g. Storaenso SYLVA CLT 140 L5s)
- For connection following duct → see page 46
- The damper can be installed from both sides of the construction, i.e. From the top or the bottom side of the ceiling.

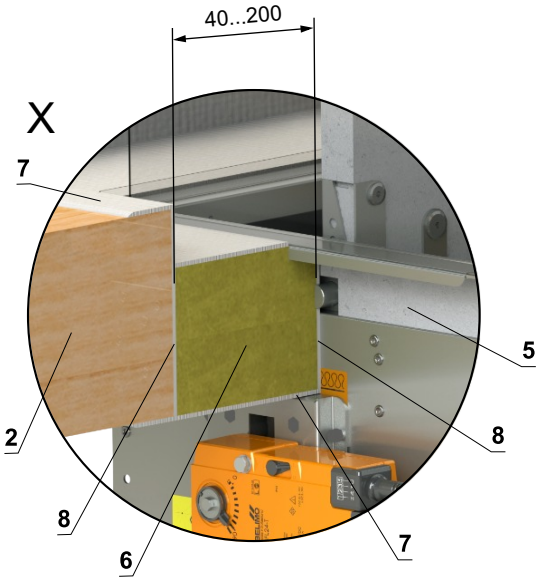

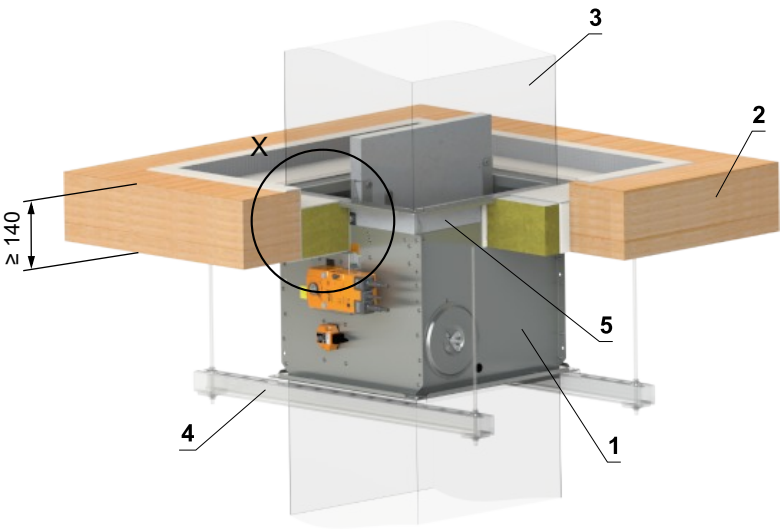

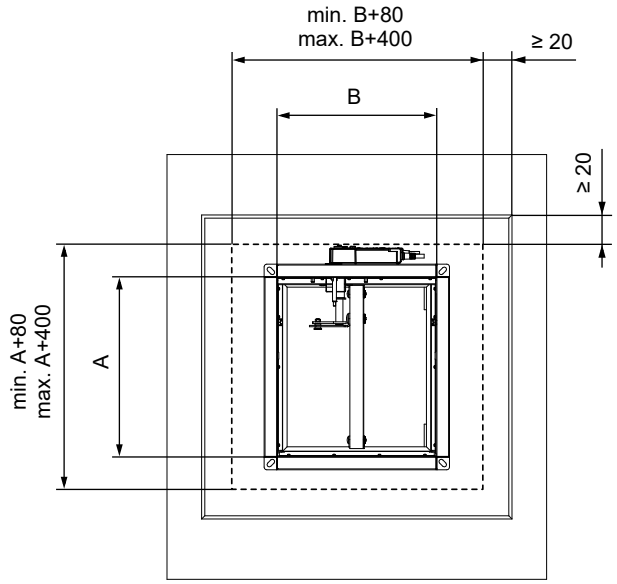

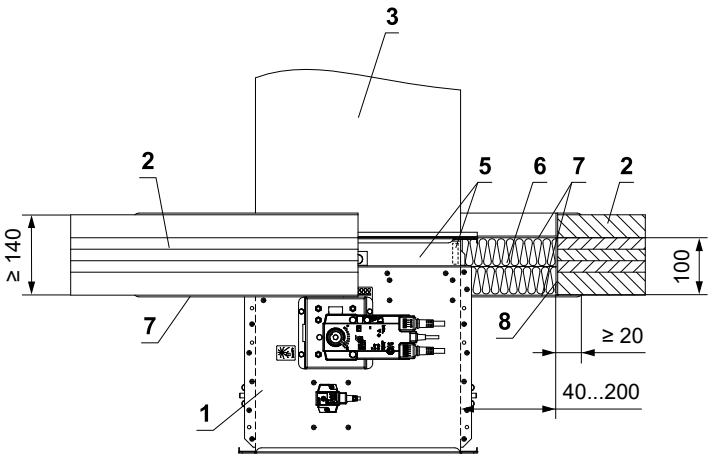

1 FDMB
2 CLT ceiling construction
3 Duct
4 Fixing profile with threaded rod → see pages 44 to 45
5 Protective cladding boards - (not part of the damper) but must be used as part of the penetration filling → see page 55
6 Ablative Coated Batt (e.g. Firestop Board HILTI CFS-CT B 1S 140/50 - min. density 140 kg/m³ + Firestop acrylic sealant HILTI CFS-S ACR or equivalent)
7 Fire stop coating thickness 1 mm (e.g. HILTI CFS-CT, PROMASTOP-CC or equivalent)
8 Fire resistant mastic - fill the gap on both sides of the fire separation construction and around the perimeter of penetration and damper body. (e.g. HILTI CFS-S ACR)

V. SUSPENSION SYSTEMS

Mounting to the ceiling wall

- The dampers must be suspended using threaded rods and mounting profiles. Their dimensioning depend on the weight of the damper.
- The dampers and the duct must be suspended separately.
- Following air-conditioning duct must be suspended or supported so that all load transfer from the following duct to the damper flanges is absolutely excluded. Adjacent duct must be suspended or supported, as required by the duct suppliers.

Examples of anchoring to the ceiling construction
Follow the instructions of fixing specialist or installation company

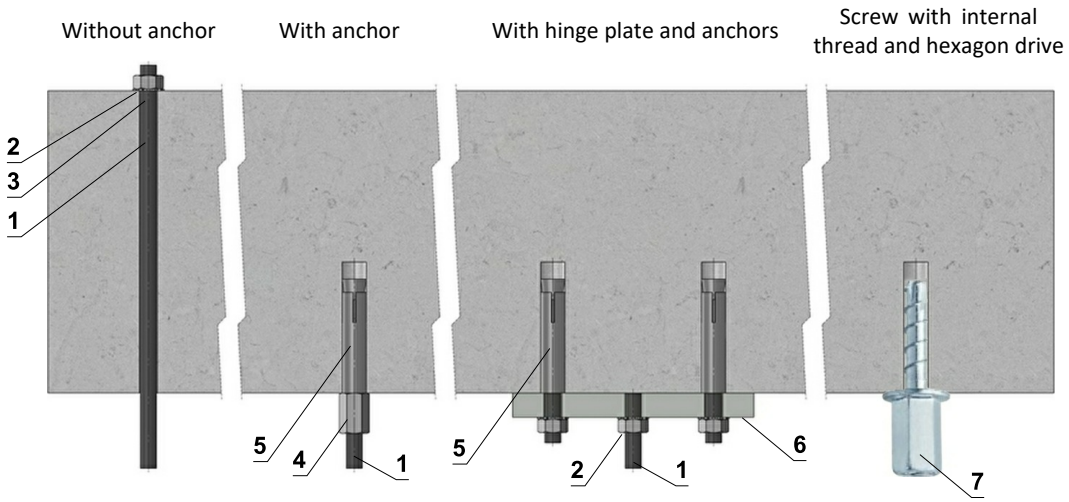

Hinge plates

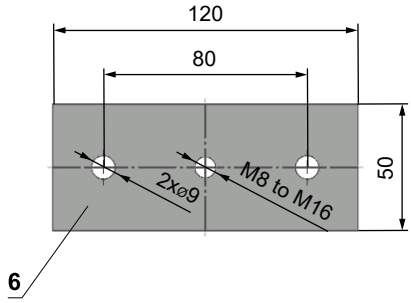

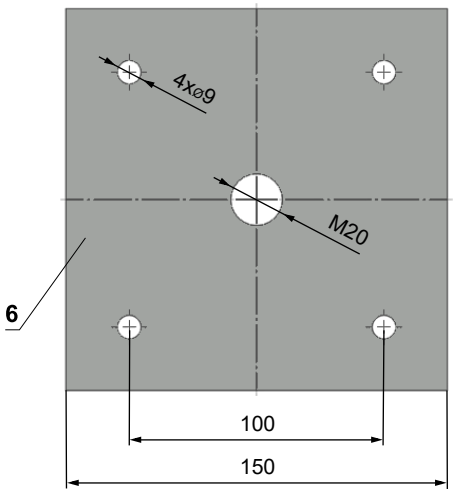

- If in doubt, always consult an anchor specialist engineer such as Halfen or Hilti.

1 Threaded rod M8 - M20
2 Nut M8 - M20
3 Washer for M8 - M20
4 Coupling Nut M8 - M20
5 Anchor
6 Hinge plate - min. thickness 10 mm
7 Concrete screw tested for fire resistance R30-R90, max. Tension up to 0.75 KN (length 35 mm)

Load capacities of threaded rods at the required fire resistance 60 min. < t ≤ 120 min.

Size	As [mm²]	Weight [kg]	
		for 1 rod	for 2 rods
M8	36,6	22	44
M10	58	35	70
M12	84,3	52	104
M16	157	96	192
M18	192	117	234
M20	245	150	300

Example of placing of mounting profiles HILTI

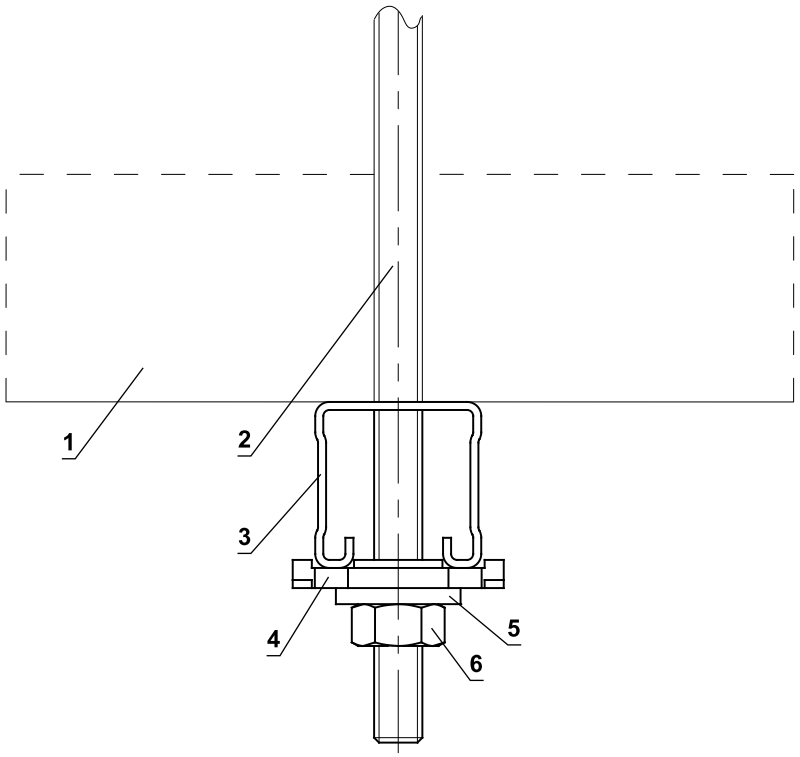

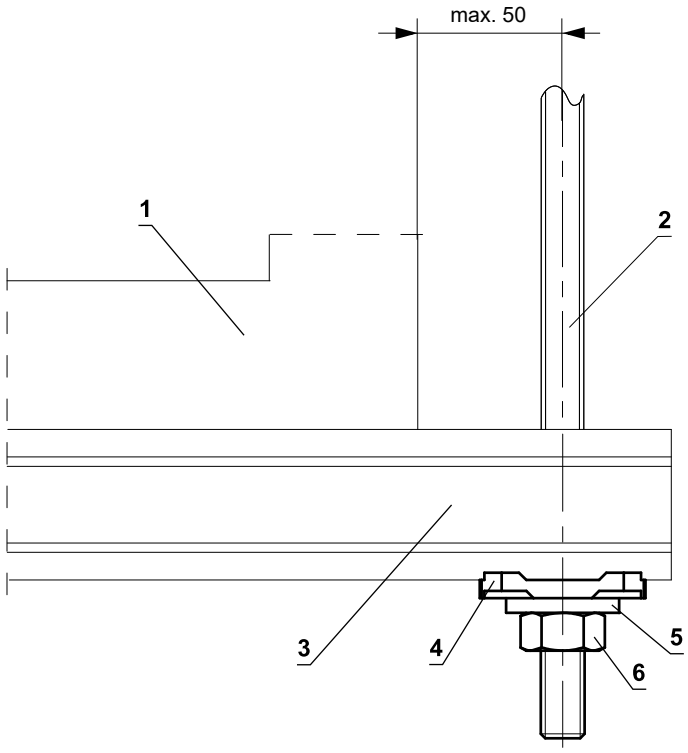

1 FDMB
2 Threaded rod M8 - M12
3 Support HILTI MQ-41 or MQ-41/3
4 Bored plate HILTI MQZ-L
5 Washer for M8 - M12
6 Nut M8 - M12

Example of duct connection

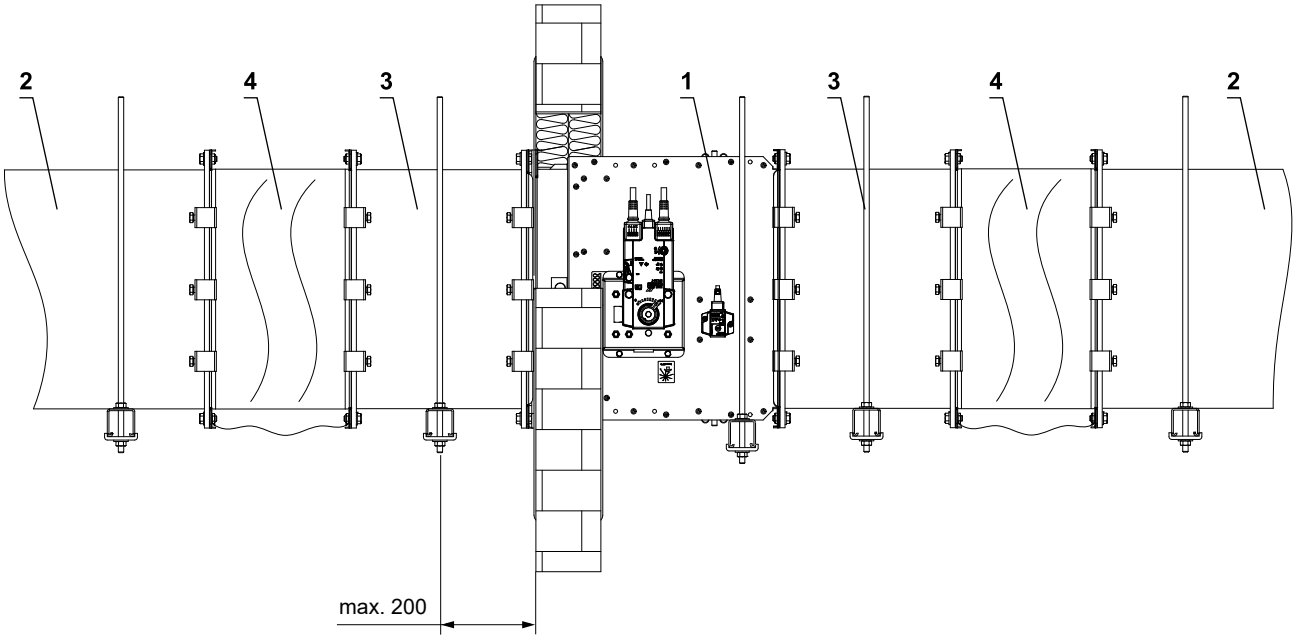

1 FDMB
2 Connecting air duct
3 Extension piece (if required)
4 Damping pad or breakaway connection as DW 144

VI. TECHNICAL DATA

Pressure loss

Pressure loss calculation

$$\Delta p = \xi \cdot \rho \cdot \frac{w^2}{2}$$

Δp	[Pa]	pressure loss
w	[m/s]	air flow speed in nominal damper section
ρ	[kg/m³]	air density
ξ	[-]	coefficient of local pressure loss for the nominal damper section → see page 48

Determination of pressure loss by using diagram ρ = 1,2 kg/m³

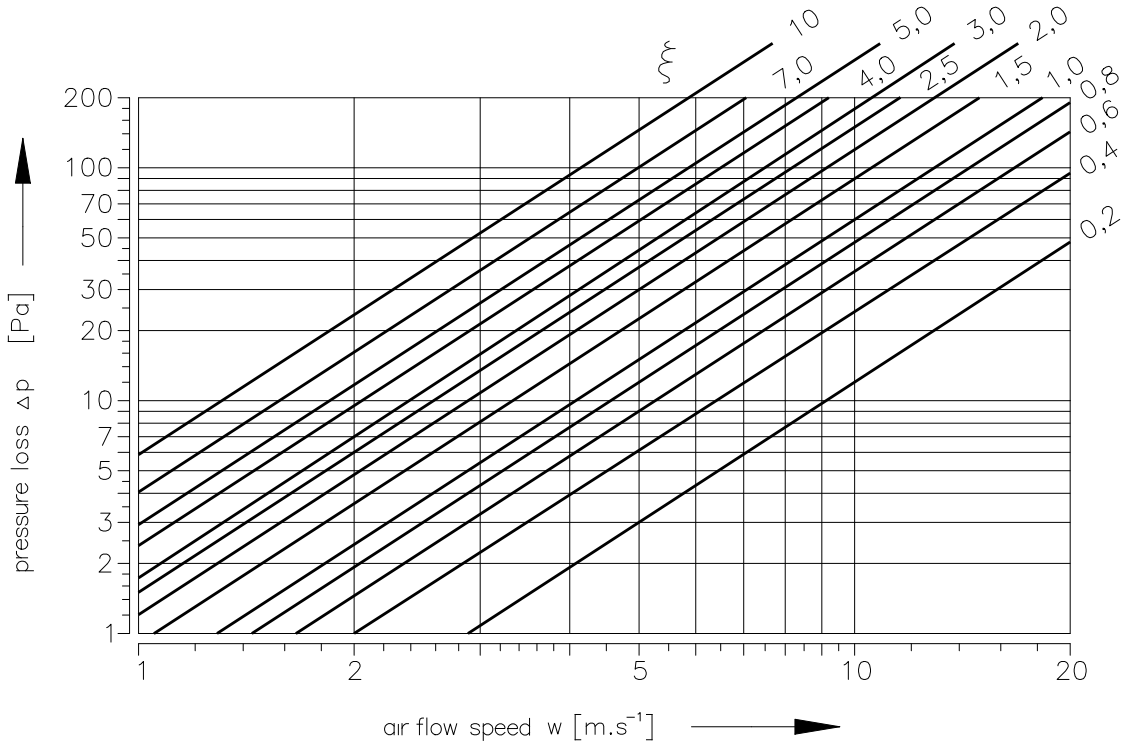

Coefficient of local pressure loss

	B													
A	**100**	**110**	**125**	**140**	**150**	**160**	**180**	**200**	**225**	**250**	**280**	**300**	**315**	**355**
100	19,025	15,910	11,370	7,983	6,374	5,264	2,959	2,962	2,162	1,548	1,399	–	–	–
110	15,690	12,678	9,499	6,910	5,576	4,528	2,743	2,649	1,978	1,459	1,299	–	–	–
125	11,247	9,984	7,440	5,444	4,529	3,773	2,461	2,208	1,744	1,327	1,163	–	–	–
140	8,673	7,669	5,933	4,489	3,755	3,195	2,204	1,893	1,552	1,217	1,044	–	–	–
150	7,408	6,620	5,144	4,007	3,388	2,899	2,091	1,728	1,443	1,160	0,985	–	–	–
160	6,659	5,813	4,748	3,683	3,129	4,771	3,458	2,717	2,285	1,813	1,538	1,407	1,327	1,165
180	4,528	4,270	3,630	3,000	2,644	4,102	3,251	2,351	2,016	1,676	1,342	1,221	1,136	0,986
200	4,490	4,170	3,466	2,807	2,446	3,701	2,951	2,105	1,867	1,554	1,302	1,113	1,052	0,933
225	4,220	3,969	3,379	2,767	2,431	3,654	2,873	2,056	1,726	1,475	1,226	1,067	1,029	0,917
250	4,120	3,904	3,306	2,744	2,405	3,588	2,793	2,005	1,675	1,386	1,155	1,033	0,987	0,893
280	3,520	3,404	3,005	2,551	2,266	3,411	2,692	1,975	1,599	1,341	1,123	0,986	0,916	0,822
300	3,307	3,225	2,876	2,457	2,189	3,288	2,599	1,903	1,536	1,315	1,101	0,974	0,911	0,787
315	3,219	3,139	2,760	2,338	2,072	3,102	2,454	1,833	1,489	1,289	0,988	0,933	0,833	0,721
355	2,914	2,842	2,550	2,195	1,963	2,955	2,302	1,796	1,412	1,199	0,956	0,902	0,799	0,678
400	3,291	3,125	2,665	2,196	1,926	2,833	2,159	1,703	1,356	1,126	0,931	0,825	0,711	0,635
450	–	–	2,690	2,176	1,884	2,732	2,055	1,623	1,302	1,103	0,852	0,777	0,677	0,599
500	–	–	2,590	2,110	1,836	2,670	1,988	1,587	1,251	1,025	0,796	0,725	0,618	0,529
550	–	–	1,976	1,885	1,731	4,219	2,941	2,237	1,687	1,402	1,156	1,039	0,968	0,827
560	–	–	1,978	1,884	1,727	4,194	2,922	2,222	1,623	1,392	1,147	1,031	0,910	0,820
600	–	–	–	1,841	1,696	4,104	2,857	2,170	1,573	1,357	1,117	1,004	0,935	0,797
630	–	–	–	1,828	1,682	4,046	2,814	2,137	1,553	1,334	1,098	0,986	0,918	0,782
650	–	–	–	1,814	1,670	4,010	2,788	2,116	1,526	1,320	1,086	0,975	0,908	0,773
700	–	–	–	–	1,664	3,975	2,759	2,098	1,515	1,297	1,071	0,965	0,892	0,761
710	–	–	–	–	1,645	3,918	2,720	2,062	1,496	1,284	1,055	0,947	0,881	0,749
750	–	–	–	–	1,630	3,865	2,682	2,032	1,475	1,264	1,037	0,931	0,866	0,736
800	–	–	–	–	1,612	3,808	2,640	1,999	1,445	1,241	1,018	0,913	0,849	0,721
900	–	–	–	–	–	3,715	2,572	1,946	1,414	1,205	0,988	0,885	0,822	0,697
1000	–	–	–	–	–	3,643	2,519	1,904	1,395	1,177	0,964	0,863	0,801	0,679

	B													
A	**400**	**450**	**500**	**550**	**560**	**600**	**630**	**650**	**700**	**710**	**750**	**800**	**900**	**1000**
100	–	–	–	–	–	–	–	–	–	–	–	–	–	–
110	–	–	–	–	–	–	–	–	–	–	–	–	–	–
125	–	–	–	–	–	–	–	–	–	–	–	–	–	–
140	–	–	–	–	–	–	–	–	–	–	–	–	–	–
150	–	–	–	–	–	–	–	–	–	–	–	–	–	–
160	1,040	2,025	1,874	1,761	1,741	1,672	1,627	1,601	1,598	1,532	1,493	1,452	1,386	1,336
180	0,922	1,676	1,548	1,451	1,434	1,375	1,337	1,315	1,289	1,256	1,224	1,180	1,133	1,090
200	0,801	1,445	1,332	1,246	1,232	1,179	1,146	1,126	1,106	1,074	1,046	1,015	0,965	0,928
225	0,781	1,239	1,172	1,075	1,035	0,998	0,965	0,938	0,926	0,905	0,873	0,856	0,822	0,803
250	0,736	1,113	1,021	0,952	0,940	0,898	0,871	0,855	0,831	0,813	0,790	0,765	0,725	0,695
280	0,713	0,996	0,912	0,849	0,880	0,800	0,775	0,760	0,742	0,722	0,701	0,678	0,641	0,613
300	0,692	0,937	0,857	0,797	0,786	0,750	0,726	0,712	0,689	0,675	0,655	0,633	0,599	0,572
315	0,634	0,900	0,822	0,764	0,754	0,718	0,695	0,681	0,662	0,646	0,626	0,605	0,572	0,546
355	0,588	0,821	0,749	0,694	0,685	0,651	0,630	0,617	0,603	0,584	0,566	0,546	0,514	0,490
400	0,527	0,757	0,689	0,637	0,628	0,597	0,577	0,565	0,543	0,534	0,516	0,498	0,468	0,445
450	0,507	0,705	0,640	0,591	0,583	0,553	0,534	0,522	0,503	0,493	0,476	0,458	0,430	0,408
500	0,460	0,666	0,603	0,556	0,548	0,520	0,501	0,490	0,482	0,462	0,446	0,429	0,401	0,380
550	0,719	0,635	0,575	0,529	0,521	0,494	0,476	0,465	0,441	0,437	0,422	0,405	0,379	–
560	0,713	0,630	0,570	0,524	0,517	0,489	0,471	0,461	0,448	0,433	0,418	0,401	–	–
600	0,692	0,611	0,552	0,507	0,500	0,473	0,455	0,445	0,426	0,418	0,403	0,387	–	–
630	0,678	0,598	0,540	0,496	0,489	0,462	0,445	0,435	0,418	0,408	0,393	–	–	–
650	0,670	0,590	0,533	0,490	0,482	0,456	0,439	0,428	0,414	0,402	0,387	–	–	–
700	0,656	0,581	0,527	0,483	0,476	0,444	0,431	0,421	0,409	0,398	–	–	–	–
710	0,648	0,571	0,515	0,472	0,465	0,439	0,422	0,412	0,399	–	–	–	–	–
750	0,636	0,560	0,504	0,462	0,455	0,429	0,413	0,403	–	–	–	–	–	–
800	0,623	0,547	0,493	0,451	0,444	0,419	–	–	–	–	–	–	–	–
900	0,602	0,528	0,474	0,434	–	–	–	–	–	–	–	–	–	–
1000	0,585	0,512	0,460	–	–	–	–	–	–	–	–	–	–	–

Noise data

Level of acoustic output corrected with filter A

$$L_{WA} = L_{W1} + 10 \log(S) + K_A$$

L_{WA}	[dB(A)]	level of acoustic output corrected with filter A
L_{W1}	[dB]	level of acoustic output L_{W1} related to the 1 m^2 section
S	[m^2]	duct cross section
K_A	[dB]	correction to the weight filter A

Level of acoustic output in octave ranges

$$L_{Woct} = L_{W1} + 10 \log(S) + L_{rel}$$

L_{Woct}	[dB]	spectrum of acoustic output in octave range
L_{W1}	[dB]	level of acoustic output L_{W1} related to the 1 m^2 section
S	[m^2]	duct cross section
L_{rel}	[dB]	relative level expressing the shape of the spectrum

Tables of acoustics values

Level of acoustic output L_{W1}[dB] related to the 1 m^2 section

	ξ [-]														
w [m/s]	**0,2**	**0,3**	**0,4**	**0,5**	**0,6**	**0,7**	**0,8**	**0,9**	**1**	**1,5**	**2**	**2,5**	**3**	**4**	**5**
2	15,5	18,7	20,9	22,6	24	25,2	26,3	27,2	28	31,2	33,4	35,1	36,5	38,8	40,5
3	26,1	29,2	31,5	33,2	34,6	35,8	36,9	37,8	38,6	41,7	44	45,7	47,1	49,4	51,1
4	33,6	36,7	39	40,7	42,1	43,3	44,3	45,3	46,1	49,2	51,5	53,2	54,6	56,9	58,6
5	39,4	42,5	44,8	46,5	47,9	49,1	50,2	51,1	51,9	55	57,3	59	60,4	62,7	64,4
6	44,1	47,3	49,5	51,3	52,7	53,9	54,9	55,8	56,6	59,8	62	63,8	65,2	67,4	69,2
7	48,2	51,3	53,5	55,3	56,7	57,9	58,9	59,8	60,7	63,8	66,1	67,8	69,2	71,4	73,2
8	51,6	54,8	57	58,8	60,2	61,4	62,4	63,3	64,1	67,3	69,5	71,3	72,7	74,9	76,7
9	54,7	57,9	60,1	61,8	63,2	64,4	65,5	66,4	67,2	70,4	72,6	74,3	75,7	78	79,7
10	57,4	60,6	62,8	64,6	66	67,2	68,2	69,1	70	73,1	75,3	77,1	78,5	80,7	82,5
11	59,9	63,1	65,3	67,1	68,5	69,7	70,7	71,6	72,4	75,6	77,8	79,6	81	83,2	85
12	62,2	65,4	67,6	69,3	70,7	71,9	73	73,9	74,7	77,9	80,1	81,8	83,2	85,5	87,2

Correction to the weight filter A

w [m/s]	**2**	**3**	**4**	**5**	**6**	**7**	**8**	**9**	**10**	**11**	**12**
K_A [dB]	-15	-11,8	-9,8	-8,4	-7,3	-6,4	-5,7	-5	-4,5	-4	-3,6

Relative level expressing the shape of the spectrum L_{rel}

	f [Hz]							
w [m/s]	**63**	**125**	**250**	**500**	**1000**	**2000**	**4000**	**8000**
2	-4,5	-6,9	-10,9	-16,7	-24,1	-33,2	-43,9	-56,4
3	-3,9	-5,3	-8,4	-13,1	-19,5	-27,6	-37,4	-48,9
4	-3,9	-4,5	-6,9	-10,9	-16,7	-24,1	-33,2	-43,9
5	-4	-4,1	-5,9	-9,4	-14,6	-21,5	-30,0	-40,3
6	-4,2	-3,9	-5,3	-8,4	-13,1	-19,5	-27,6	-37,4
7	-4,5	-3,9	-4,9	-7,5	-11,9	-17,9	-25,7	-35,1
8	-4,9	-3,9	-4,5	-6,9	-10,9	-16,7	-24,1	-33,2
9	-5,2	-3,9	-4,3	-6,4	-10,1	-15,6	-22,7	-31,5
10	-5,5	-4	-4,1	-5,9	-9,4	-14,6	-21,5	-30
11	-5,9	-4,1	-4	-5,6	-8,9	-13,8	-20,4	-28,8
12	-6,2	-4,3	-3,9	-5,3	-8,4	-13,1	-19,5	-27,6

VII. MATERIAL, FINISHING

- Damper casings are made from galvanized sheet metal without further surface treatment.
- Damper blades are made from fire resistant asbestos free boards made of mineral fibres.
- Manual control have cover made of mechanically resistant and durable plastic and the other parts are galvanized without further surface treatment.
- Fusible links are made of sheet brass, thickness 0,5 mm.
- Fasteners and springs are galvanized.
- According to the customer's requirements, dampers can be made of stainless steel material.

  Specifications for stainless-steel design:

  - Class A2 – Food-grade stainless steel (AISI 304 – BS EN 1.4301)
  - Class A4 – Chemistry-grade stainless steel (AISI 316, 316L – BS EN 1.4401, BS EN 1.4404)

  The respective stainless steel is the material for all components that are located or entering the damper inner space; components outside the damper casing are typically from galvanised sheet metal (fasteners for mounting the actuator or manual control, mechanical components except Item 4), frame components.

  The following components, including the fasteners, are made from stainless steel at all times:

  1) Damper casing and all components permanently attached
  2) Blade holders including pins, metal parts of blades
  3) Control components inside the damper (L-profile, pin with lever, rod, fasteners)
  4) Parts of a manual contol entering the inner space of a damper casing (lower sheet of a manual control, lock holder “1”, lock lever “2”, closing spring, 8 dia. stopper pin, manual control pin)
  5) Inspection opening cover including the stirrup and fasteners (if they are parts of the cover)
  6) Bearing for torque transfer from the lever with pin on the blade L-profile (made from AISI 440C)

  The damper blade is made from a board of homogeneous material Promatect-MST, thickness 30 mm.

  Fusible link is identical for all material variants of the dampers. Upon specification by customer, the fusible link can be made from A4 from stainless steel sheet metal.

  Thermoelectric activation device BAT is modified for stainless-steel variant of the dampers; standard galvanised screws are replaced with stainless-steel M4 screws of corresponding class. Damper casing has stainless-steel riveting M4 nuts.

  Plastic, rubber and silicon components, sealants, foaming tapes, glass-ceramic seals, housings, brass bearings of the blade, actuators, and end switches are identical for all material variants of the dampers.

  Some fasteners and components are only available in one class of stainless steel; the type will be used in all stainless-steel variants.

  The damper blade in the variant for chemical environments (Class A4) is always treated with a coating of chemically resistant Promat SR.

  Any other requirements for the design will be considered atypical and will be addressed on an individual basis.

VIII. TRANSPORTATION AND STORAGE

Logistic terms

- Dampers are delivered on pallets. As standard, the dampers are wrapped in plastic foil for protection during transport and must not be used for long-term storage. Temperature changes during transport can cause condensation of water inside the packaging and thereby cause corrosion of materials used in the dampers (e.g. white corrosion on zinc-coated items or mould on calcium silicate). Therefore, it is necessary to remove the transport packaging immediately after unloading to allow air to circulate around the product.
- The dampers must be stored in clean, dry, well ventilated and dust-free environment out of direct sunlight. Ensure protection against moisture and extreme temperatures (minumum temperature +5°C). The dampers must be protected against mechanical and accidental damage prior to installation.
- Another required packaging system should be approved and agreed by manufacturer. Packaging material is not returnable in case that another packaging system (material) is required and used and it is not included into final price of damper.
- Dampers are transported by box freight vehicles without direct weather impact, there must not occur any shocks and ambient temperature must not exceed +50°C. Dampers must be protected against impact when transported and manipulated. During transportation, the damper blade must be in the "CLOSED" position.
- Dampers are stored indoor in environment without any aggressive vapours, gases or dust. Indoor temperature must be in the range from -30°C to +50°C and maximum relative humidity 95% (avoid condensation on the damper body). Dampers must be protected against impact when transported and manipulated.

IX. ASSEMBLY, ATTENDANCE AND MAINTENANCE

- Assembly, maintenance and damper function check can be done only by qualified and trained person, i.e. “AUTHORIZED PERSON” according to the manufacturer documentation. All works done on the fire dampers must be done according international and local norms and laws.
- All effective safety standards and directives must be obse-rved during damper assembly.
- To ensure reliable damper function it is necessary to avoid blocking the actuating mechanism and contact surfaces with collected dust, fibre and sticky materials and solvents.
- Flange and screw joints must be conductively connected to protect against dangerous contact. 2 galvanized lock washers that are placed under the head of one screw and a fastened nut are used for conductive connection.

Manual operation - actuator control without electric voltage

- A special wrench (part of the actuator) can be used to manually turn the damper blade to any position. When the wrench is turned in the direction of the arrow, the damper blade rotates to its open position. As the blade rotation is stopped, in every position, the actuator will be locked. Unlocking is possible even manually as per instructions on the actuator, or by the activation of the supply voltage.
- If the actuator is manually locked, the damper blade will not close in the event of a fire after the activation of the thermoelectric activation device BAT. To restore correct damper operation, the actuator must be unlocked (manually or by applying power supply).

Limit switches

- If the damper is equipped with limit switches and these switches are not used during operation (e.g. because of a project change), they can be left on the damper and not connected (they need not be dismounted).
- On the other hand, if the limit switch is to be added to the damper design, the change can be implemented by change kit.
- These facts must be recorded in the respective operation documentation of the damper (record books of the damper, fire logs, etc.) and subsequently, adequate function checks must be carried out.

Installation / fixing the damper

- The damper casing shall not be deformed in the course of bricking in.
- Once the damper is built in, the damper blade shall not grind on the damper casing during opening or closing.

Protection of the damper casing against buckling during installation, especially for large sizes!

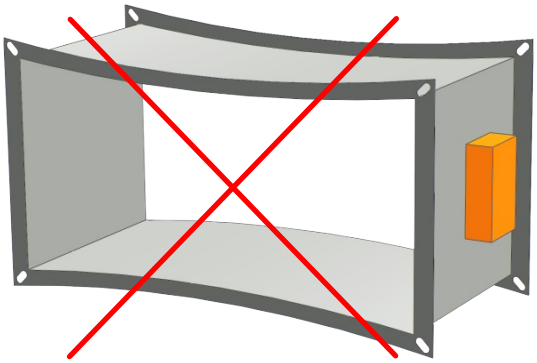

WRONG!

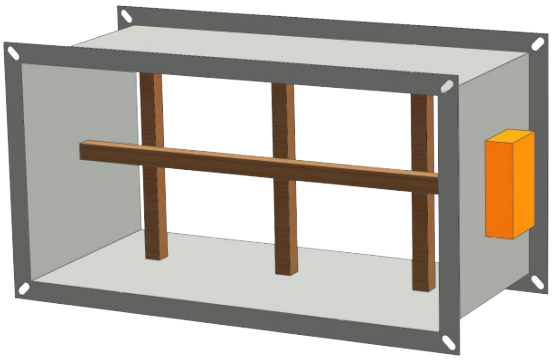

Reinforcement of the casing with wooden beams

Change of manual control for the actuator or vice versa

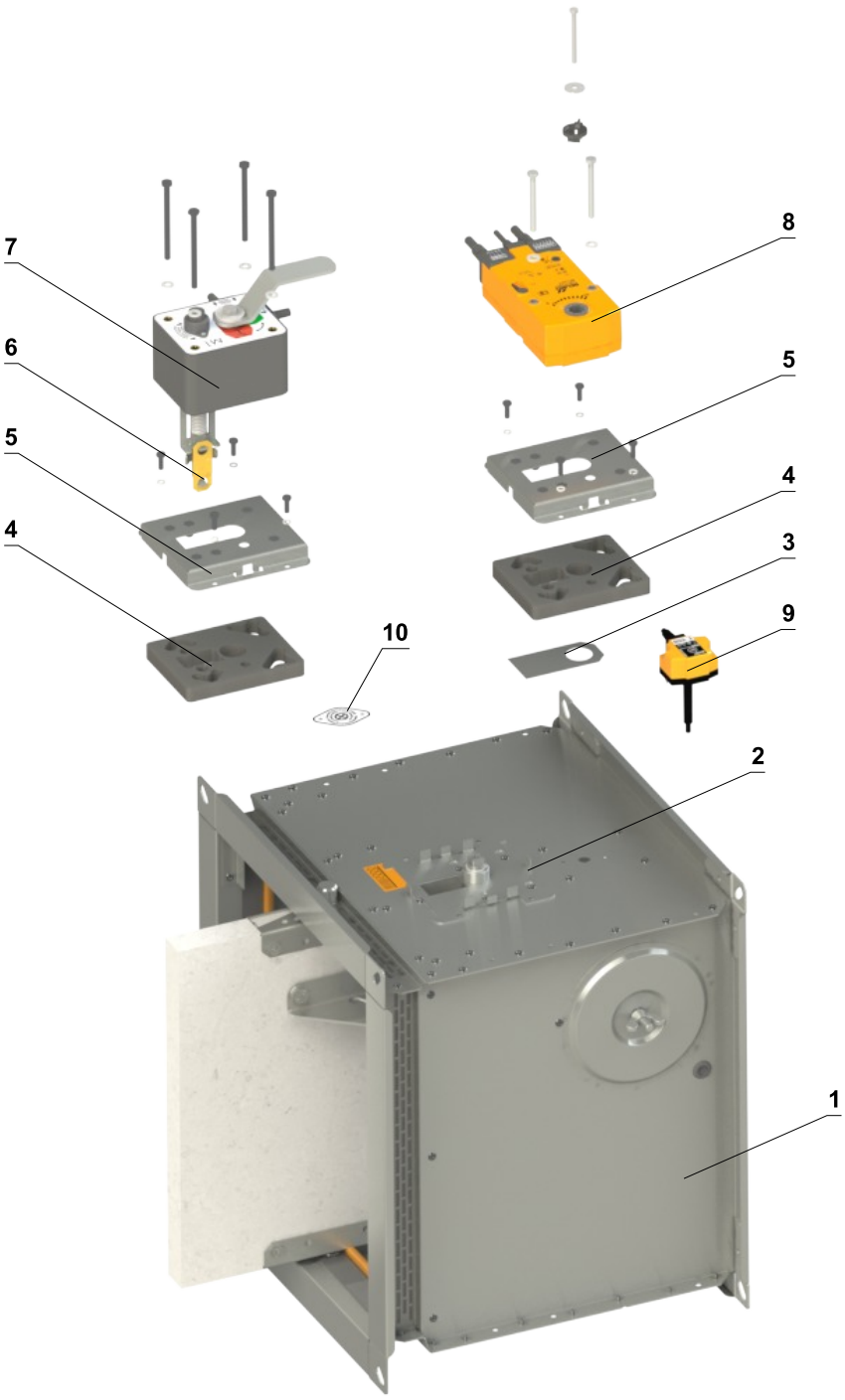

1	Damper	6	Fusible link
2	Mouting plate	7	Manual control
3	Sealing cover	8	Spring return actuator
4	Sealing of a mouting plate	9	Thermoelectric activation device BAT
5	Cover of a mouting plate	10	Sensor sticker

Reinforcing frame VRM2-B

- If the damper is installed outside the fire separation construction with insulation from ISOVER and fire resistance is ≥ EI 90 S, VRM2-B reinforcement frame must be used.
- For lower fire resistance than EI 90 S, VRM2-B reinfo-rcement frame is not necessary!
- Glue K84 is not included in the package

Fixing of reinforcing frame VRM2-B to the damper casing

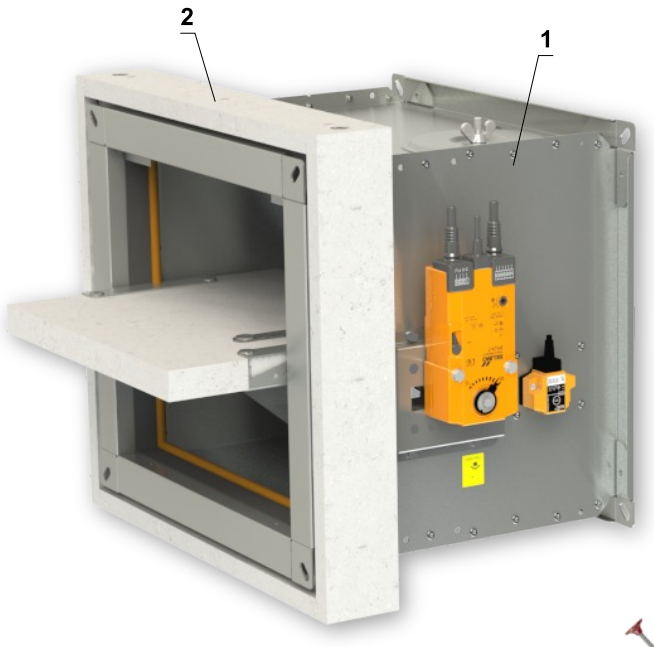

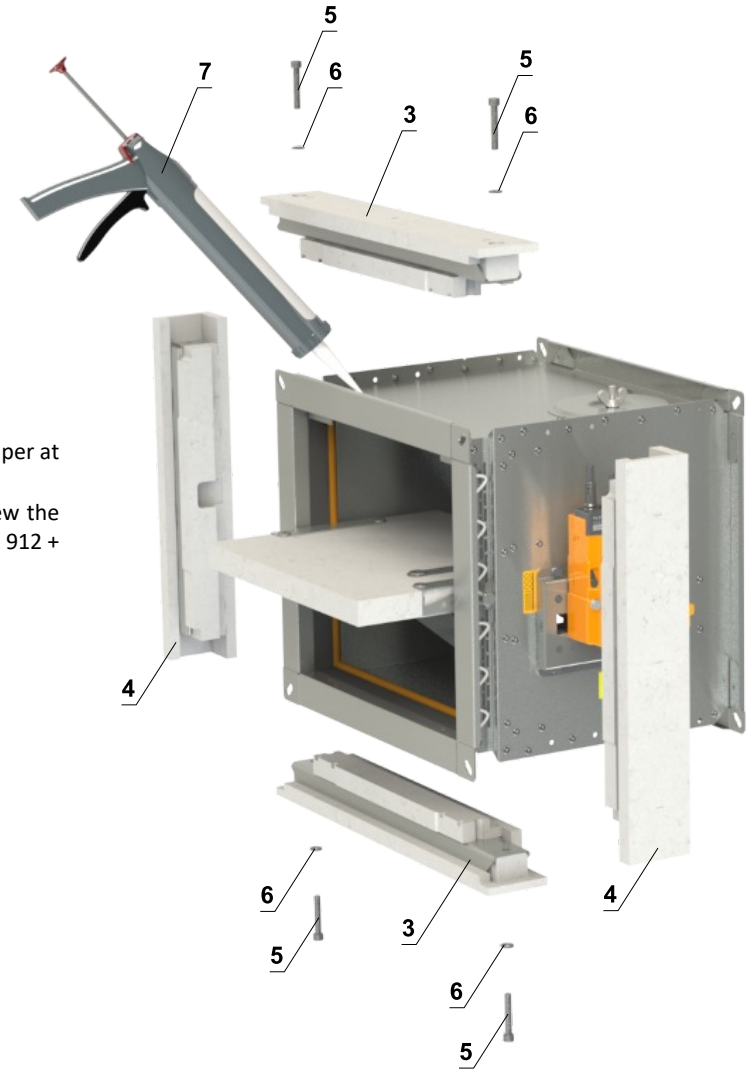

Installation procedure

1) Apply glue PROMAT K-84 on the entire surface of the damper at the place of perforation on all four sides of the damper
2) Attach parts A and B of the VRM2-B to the damper. Screw the parts together using four M8x50 hexagon socket bolts DIN 912 + four M8 washers DIN 7349.

1 FDMB
2 VRM2-B
3 Part A of VRM2-B
4 Part B of VRM2-B
5 Hexagon socket bolt M8x50 DIN 912
6 Washer M8/8,4 DIN 7349
7 Glue PROMAT K-84

Protective cladding boards

- Protective cladding boards must be used as part of the penetration filling of installation with ablative coated batt
- Can be ordered from MANDIK (installed on the damper or as an accessory) or can be sourced from local supplier
- If protective cladding boards are required, this must be specified in the ordering key
- Boards are made of PROMATECT-H, thickness 10 or 15 mm according to the damper size (SUPALUX, thickness 9 or 15 mm can be used as an alternative)
- Glue K84 is not included in the package

Installation procedure

1) Apply K84 glue over the entire surface
2) Attach protective cladding boards to the damper and glue them to the casing

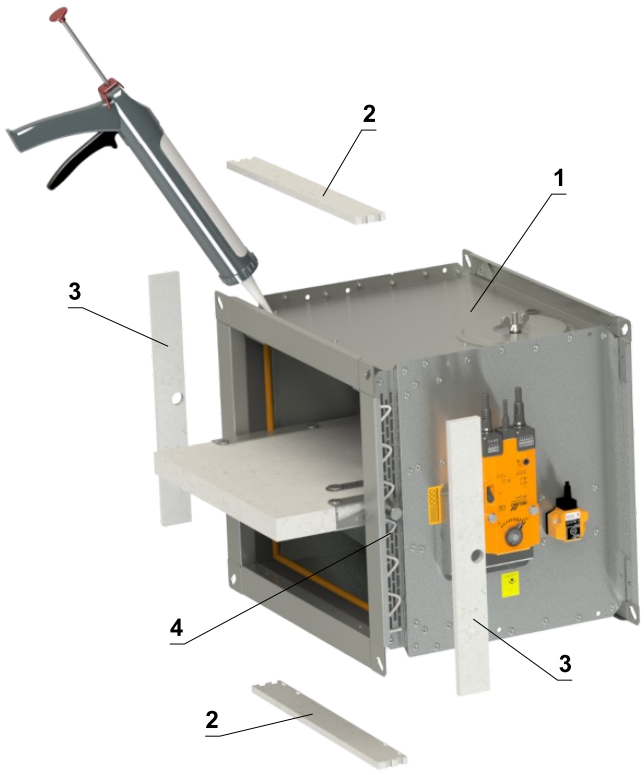

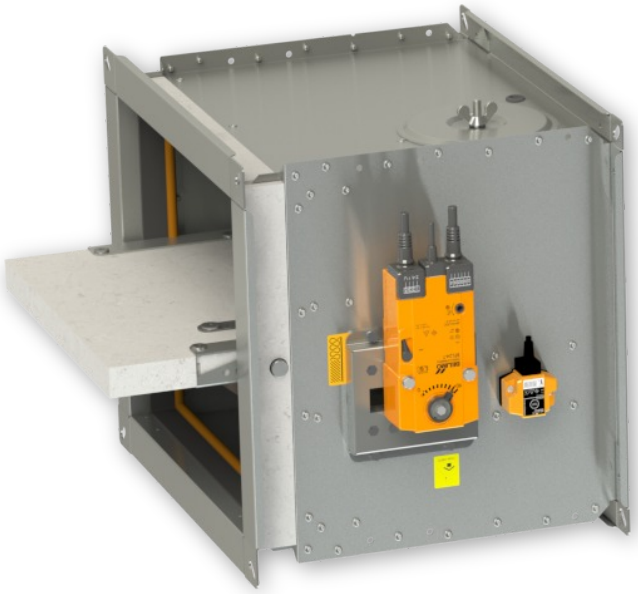

1 FDMB
2 Part A
3 Part B
4 Glue K-84 PROMAT

Part A (A≥630)

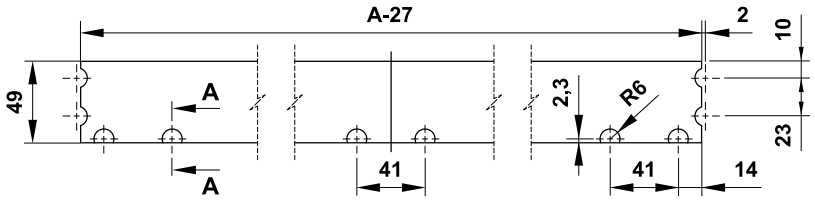

Part A (A<630)

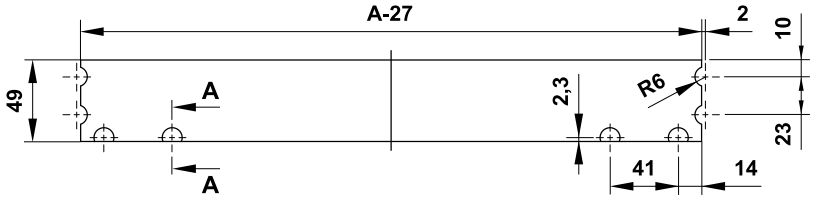

Part B

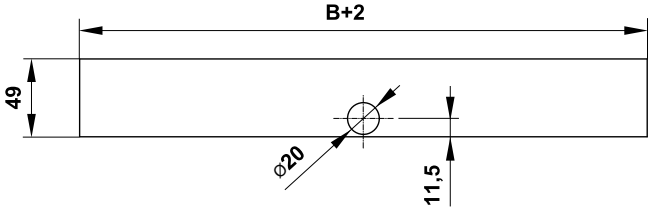

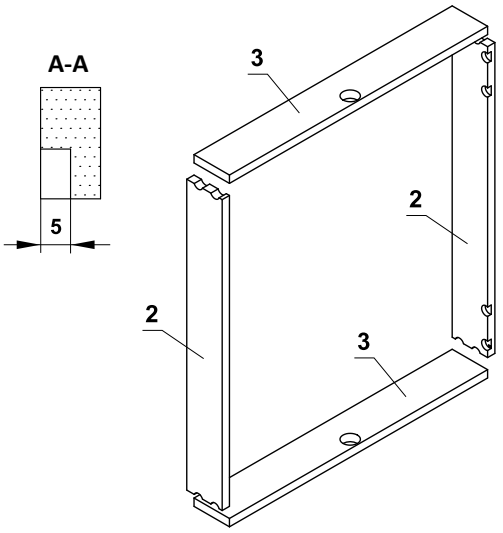

- Thickness of protecive clading boards according to the damper size:
- for AxB ≤ 500x400, thickness 10 mm
- for AxB > 500x400, thickness 15 mm

Entry into service and revisions

- Before putting the damper into operation, serviceability checks and functional tests must be carried out including testing of functionality of all electrical elements. After putting into operation these serviceability checks must be carried at least twice a year. If no defect is found during two subsequent serviceability checks, these checks can be carried out once a year.
- In case that dampers are found unable to serve for their function for any cause, it must be clearly marked. The operator is obliged to ensure that the damper is put into condition in which it is ready for function and meanwhile he is obliged to provide the fire protection by another appropriate way.
- Results of regular checks, imperfections found and all-important facts connected with the damper function must be recorded in the "FIRE BOOK" and immediately reported to the operator.
- Before entering the dampers with actuator into operation after their assembly and by sequential checks. Check of blade rotation into the breakdown position "CLOSED" can be done after disconnecting the actuator supply (e.g. by pressing the test button at the thermoelectric activation device BAT or disconnecting the supply from ELECTRICAL FIRE SIGNALISATION). Check of blade rotation back into the "OPEN" position can be done after restoration of power supply (e.g. by releasing the test button or restoration of supply from ELECTRICAL FIRE SIGNALISATION). Without power supply, the damper can be operated manually and fixed in any required position. Release of the locking mechanism can be achieved manually or automatically by applying the supply voltage. It is recommended to provide periodical checks, maintenance and service actions on fire equipment by authorized persons. The authorized persons can be trained by producer, or by authorized distributor. All effective safety standards and directives must be observed during fire damper assembly.
- Visual inspection of proper damper installation, inner area of a damper, damper blade, contact surfaces and silicon seal.
- For regular or exceptional inspection of interior of fire damper, micro-camera device can be used. On each fire damper is an inspection opening. In the case of inspection by camera, take out the black rubber cap, insert the camera inside the damper, check interior and at the end of inspection, put the rubber cap back tightly to cover the empty hole.

Following checks must be carried out for dampers with manual control

Check of a manual control and fusible link

- **To check the function of the manual control proceed as follows:**
- Turn the damper blade to "CLOSED" position as follows:
  - The damper blade is in "OPEN" position.
  - Press the control button of the manual control to turn the damper blade to "CLOSED" position.
  - Check the damper blade rotation to "CLOSED" position.
  - Damper blade closing shall be smooth and fast, the control lever shall be in „CLOSED“ position.
- Turn the damper blade to "OPEN" position as follows:
  - Turn the control lever by 90°.
  - Check the damper blade rotation to "OPEN" position.
  - The lever will automatically lock in "OPEN" position.
- **Check of function and condition of the fusible link:**
  - To check the function and the status of the fuse it's possible to remove the manual control from the casing of the fire damper which is attached to the damper casing with four screws M6.
  - Removing the fusible link from the fuse holder of a manual control, checks its correct functionality.
  - The manual control is identified as M2 and M3, depending on the closing spring strength.

Following checks must be carried out for dampers with actuator

- Check the rotation of the blade to "CLOSED" failure position after disconnection the power supply of the actuator (e.g. by pressing the test button on the thermoelectric activation device BAT or by disconnection the power supply from electrical fire signalization). Check the rotation of the blade back to "OPEN" position by restoring the power supply to the actuator (e.g. by releasing the test button or by restoring the power supply from electrical fire signalization).

- Inspection opening disassembly
  - Release the covering lid by turning the wing nut and while turning the lid right or left release it from the security belt. Then tilt the lid and remove it from its original position.

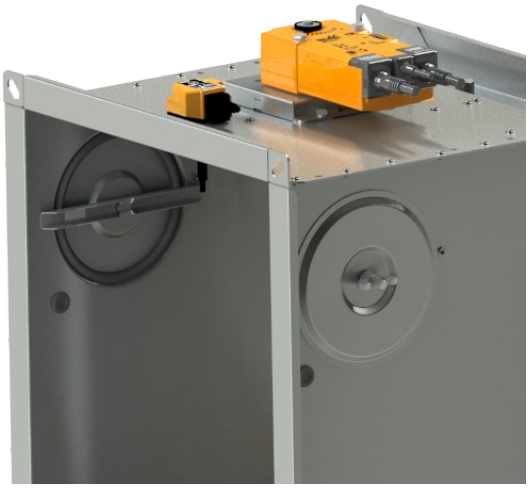

Inspection opening detail

- Ensure each damper is fully checked for operational capability, control should be initiated from the control system or by manual control. Damper blades should open and close correctly and operation should be visually inspected and documented prior to handover.

How to proceed after Tf1 or Tf2 fuses have been activated

- If the fusible link **Tf1** is interrupted (due to temperature outside the duct), it is necessary to replace the spring return actuator. → see page 10
- If the fusible link **Tf2** is interrupted (due to temperature inside the duct) , only the spare part ZBAT 72 (95/120/140) needs to be replaced (acc.to the activation temperature). → see page 10

X. ORDERING INFORMATIONS

Ordering key

EXAMPLES:

FDMB UK 500x250/375 .40 Q30-ZN

Fire damper FDMB, dimension 500x250 mm, built length 375 mm, control design with spring return actuator AC 230 V, standard activation temperature 72 °C, flange dimension 30 mm, galvanized material variant, without installation kit/frame, standard silicon seal.

FDMB UK 500x250/375 .01 104 E5 Q30-ZN P G

Fire damper FDMB, dimension 500x250 mm, built length 375 mm, control design with manual control, activation temperature 104 °C, with installation frame E5, flange dimension 30 mm, galvanized material variant, impregnation against humidity, rubber cold seal.

1| Fire damper type - FDMB

2| Country of destination

3| Damper dimensions A x B → see pages 14 to 19

"A" is the width of the damper

"B" is the height of the damper

4| Built length - 375 mm

5| Damper design

.01	Manual control and thermal
.11	Manual control and thermal with a terminal switch („CLOSED“)
.80	Manual control and thermal with two terminal switches („OPEN“, „CLOSED“)
.40	With actuator BF 230-TN (BFL, BFN 230-T) - voltage AC 230 V
.50	With actuator BF 24-TN (BFL, BFN 24-T) - voltage AC/DC 24 V

6| Activation temperature

Manual control		Spring return actuator control
	72 °C *	72 °C *
104	104 °C	
147	147 °C	

** Standard activation temperature*

7| Installation kit/frame

	Without installation kit/frame
A	With protective cladding boards (for Ablative Coated Batt installation)
VRM2-B	Reinforcing frame VRM2-B
E5	Installation frame E5

8| Flange dimension

Q30	Flange width 30 mm

9| Material and other design options

ZN	Galvanized
A2	Stainless steel 1.4301 (AISI 304)
A4	Stainless steel 1.4404 (AISI 316L) - included damper blade impregnation against chemical - type PROMAT SR

10| Surface treatment

	Without surface treatment
IW	Damper blade impregnation, impregnating agent PROMAT 2000 - impregnation against humidity
IA	Damper blade impregnation, impregnating agent PROMAT SR - impregnation against chemical

11| Cold seal variant

	Silicone rubber *
G	Silicone-free rubber

** Standard cold seal*

Accessories

Protective cladding boards

1| Accessory type - cladding boards

2| Fire damper type - FDMB

3| Damper dimensions A x B → see pages 14 to 19

Reinforcing frame VRM2-B

1| Accessory type - reinforcing frame VRM2-B

2| Fire damper type - FDMB

3| Damper dimensions A x B → see pages 14 to 19

Installation frame E

1| Installation frame type E5

2| Fire damper type - FDMB

3| Damper dimensions A x B → see pages 14 to 19

Data label

- Data label is placed on the damper casing (example)

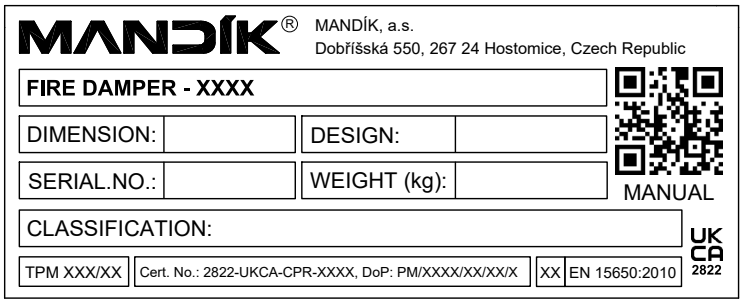

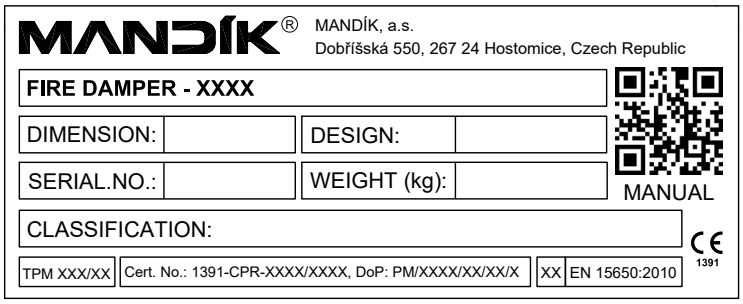

The producer reserves the right for innovations of the product.
For actual product information see www.mandik.co.uk

MANDÍK®

www.mandik.co.uk

Manufacturer
MANDÍK, a. s. • Dobříšská 550 • 267 24 Hostomice • Czech Republic • Tel.: +420 311 706 742 • E-Mail: mandik@mandik.cz
Authorized representative
MANDIK UK Ltd • 130 Aztec West • Bristol BS32 4UB • United Kingdom • Tel.: +44 117 4526376 • E-Mail: help@mandik.co.uk